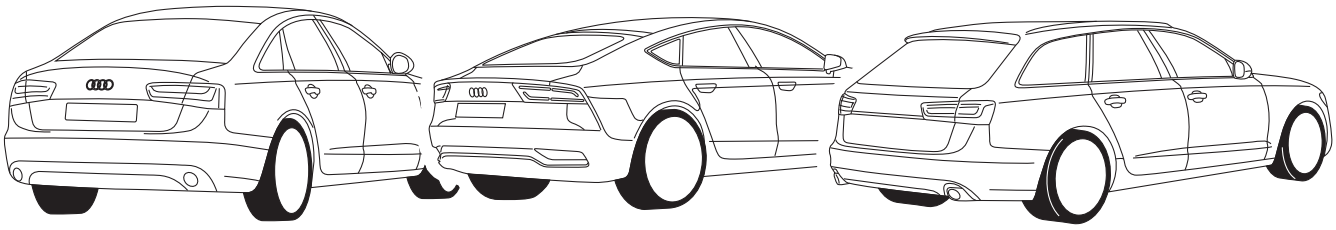

Audi A6 Sedan 01/2015- (4G)
Audi A7 Sportback 01/2015- (4G)
Audi A6 Avant 01/2015- (4G5)

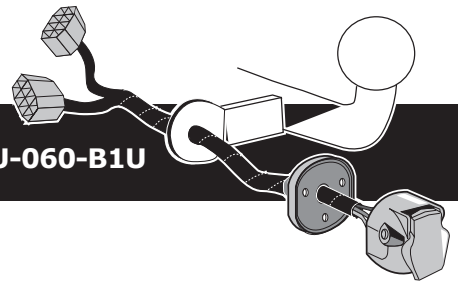

Only for models without towbar preparation

Partnr.: AU-060-B1U

• Fitting instructions electric wiring kit tow bar with 12-N socket up to DIN/ISO Norm 1724.

• We would expressly point out that assembly not carried out properly by a competent installer will resultin cancellation of any right to damage compensation, in particular those arising by virtue of the product liability act.

• Contents of these kits and their fitting manuals are subject to alteration without notice, please ensure that these instructions are read and fully understood before commencing installation.

• Do not overload circuits; the maximum loads per connection are detailed in this manual.

• Attention! Before Installation, please read this manual carefully and inform your customer to consult the vehicle owners manual to check for any vehicle modifications required before towing.

• In the event of functional problems, troubleshooting must be limited to about 0.5 hours, contact the technical support: ukts@ecs-electronics.com / 07440 202 052.

Part list

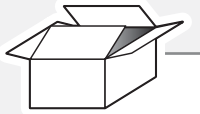

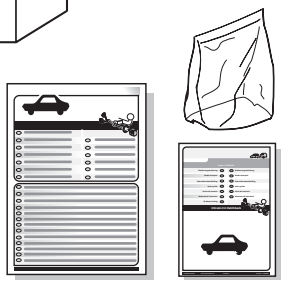

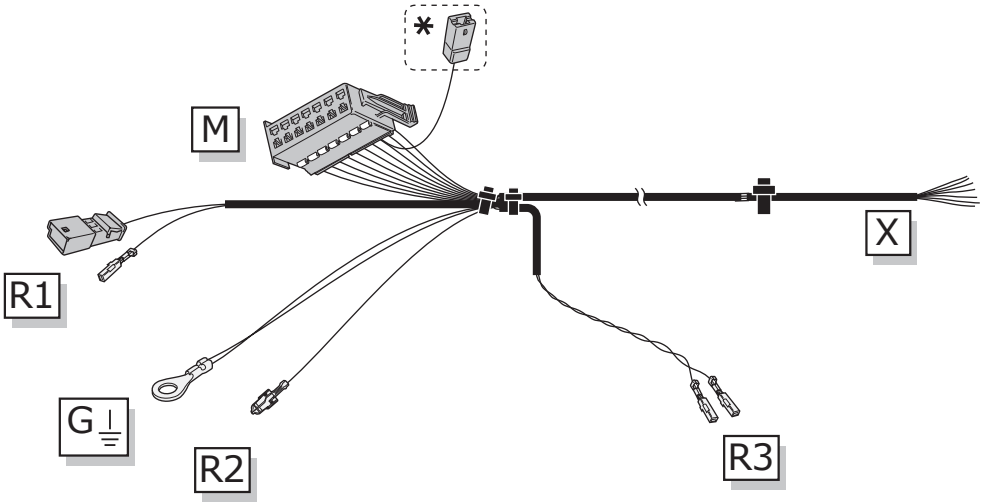

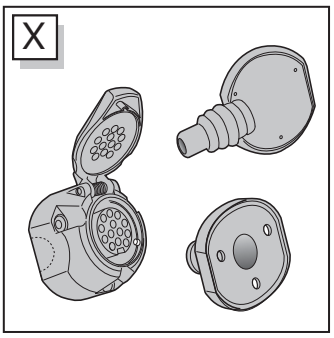

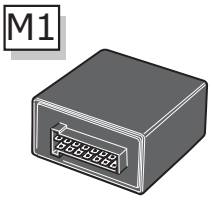

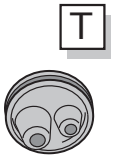

* Reverse signal preparation

Pag. 18

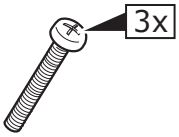

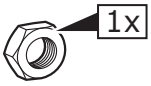

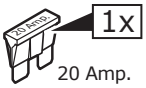

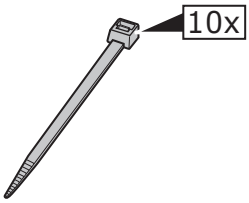

Audi A6 Sedan

ROUTING

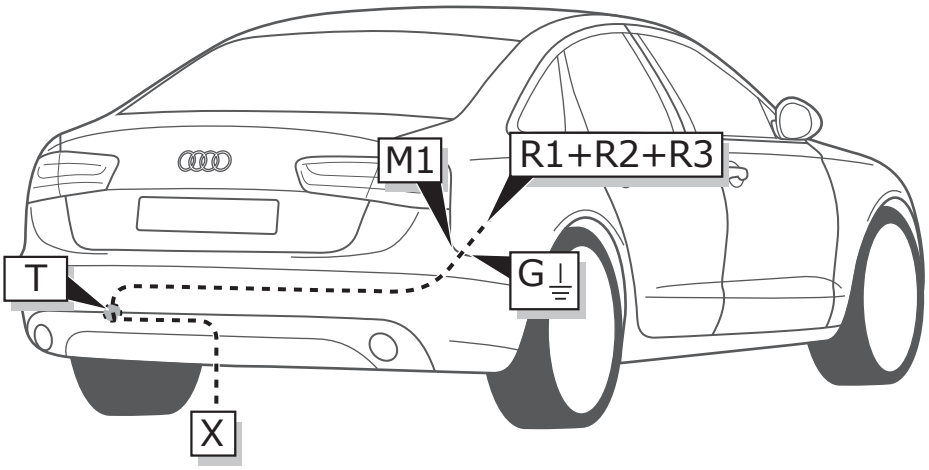

Audi A7 Sportback

ROUTING

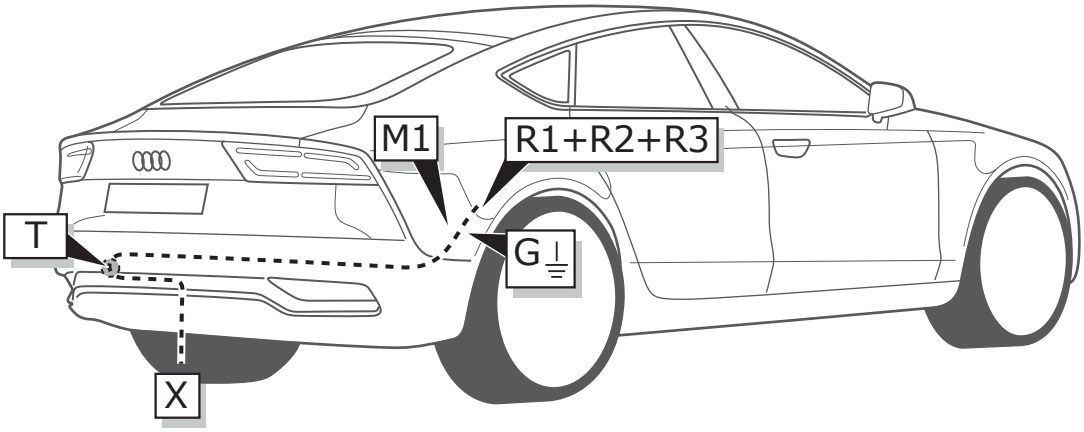

Audi A6 Avant

ROUTING

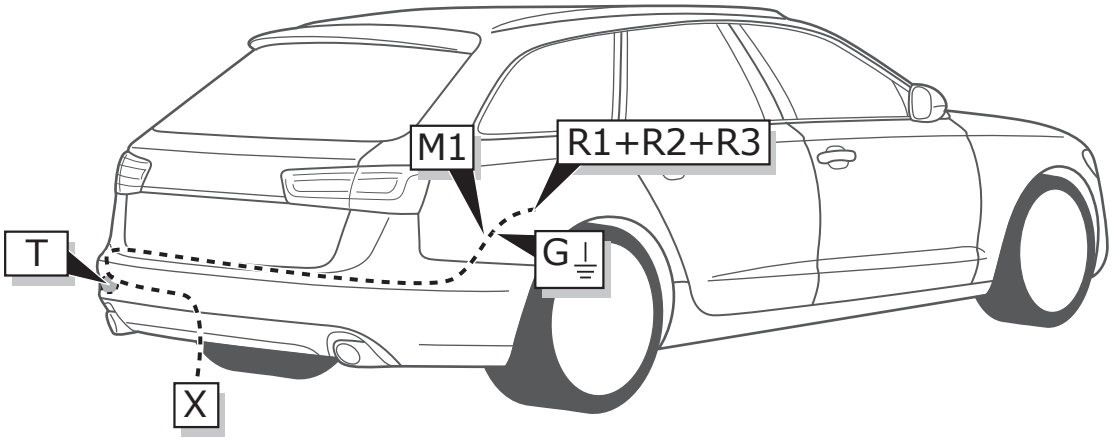

All Models

1

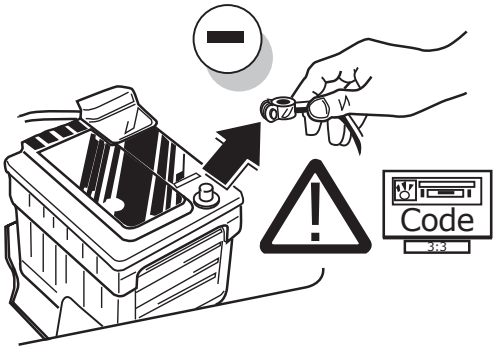

A6 Sedan

2

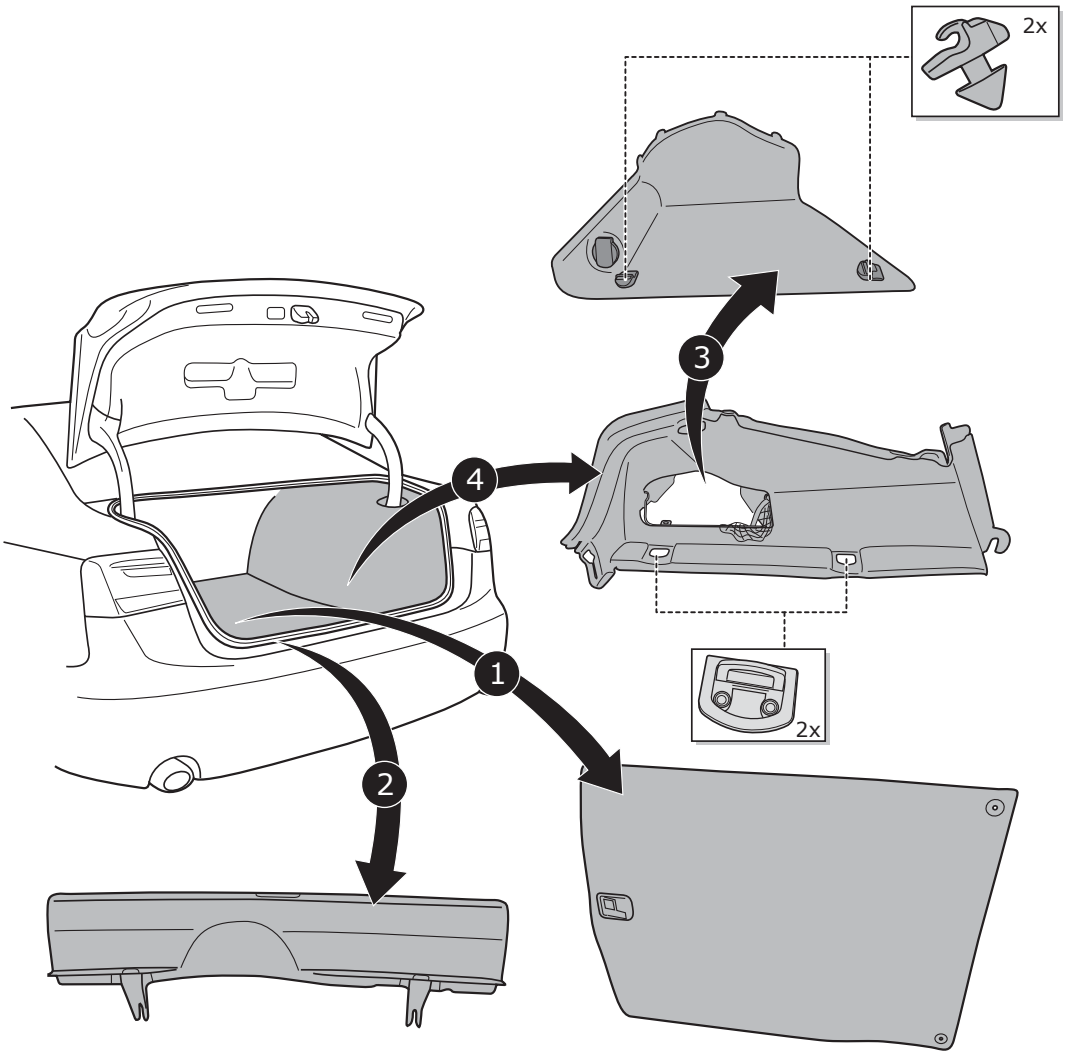

A6 Sedan

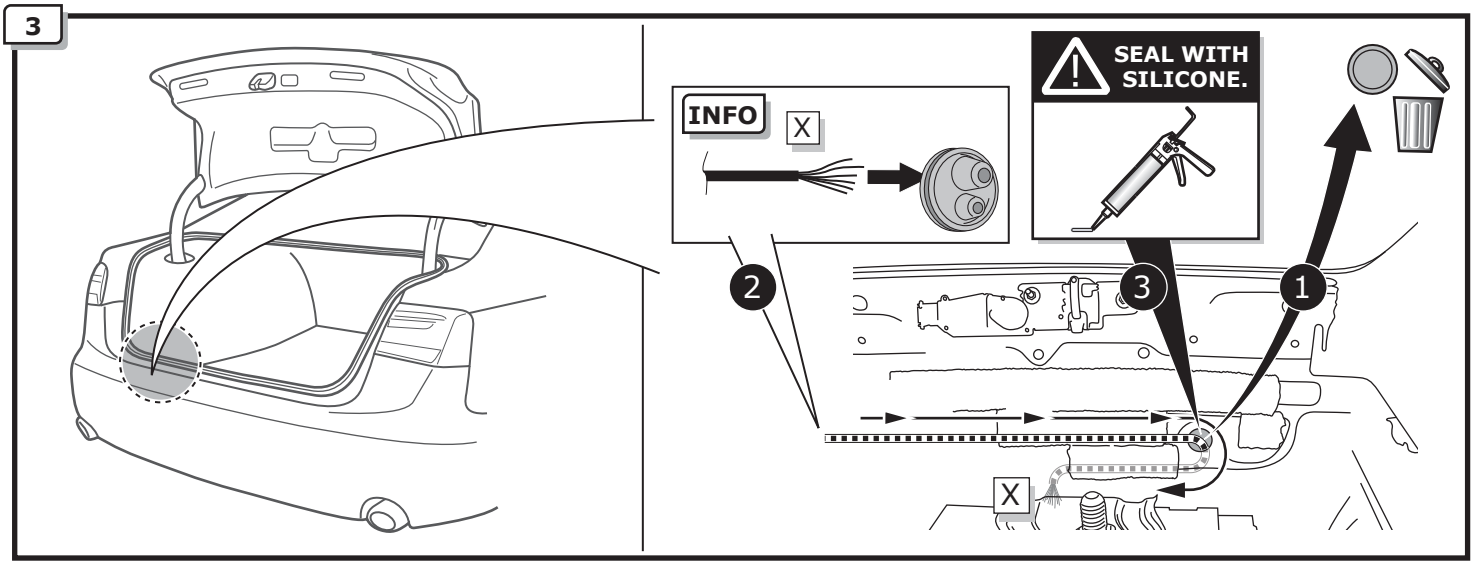

A7 Sportback

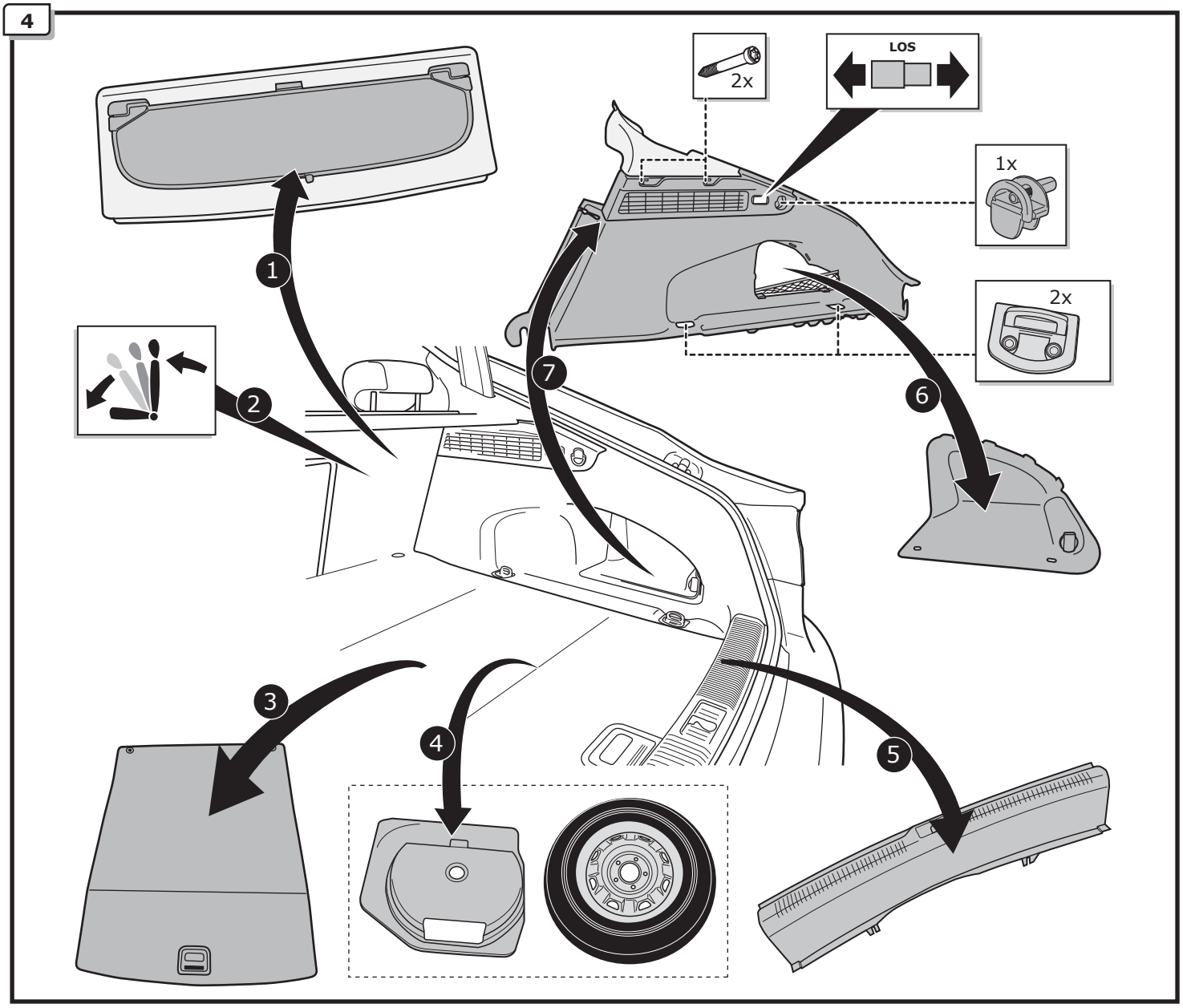

A7 Sportback

5

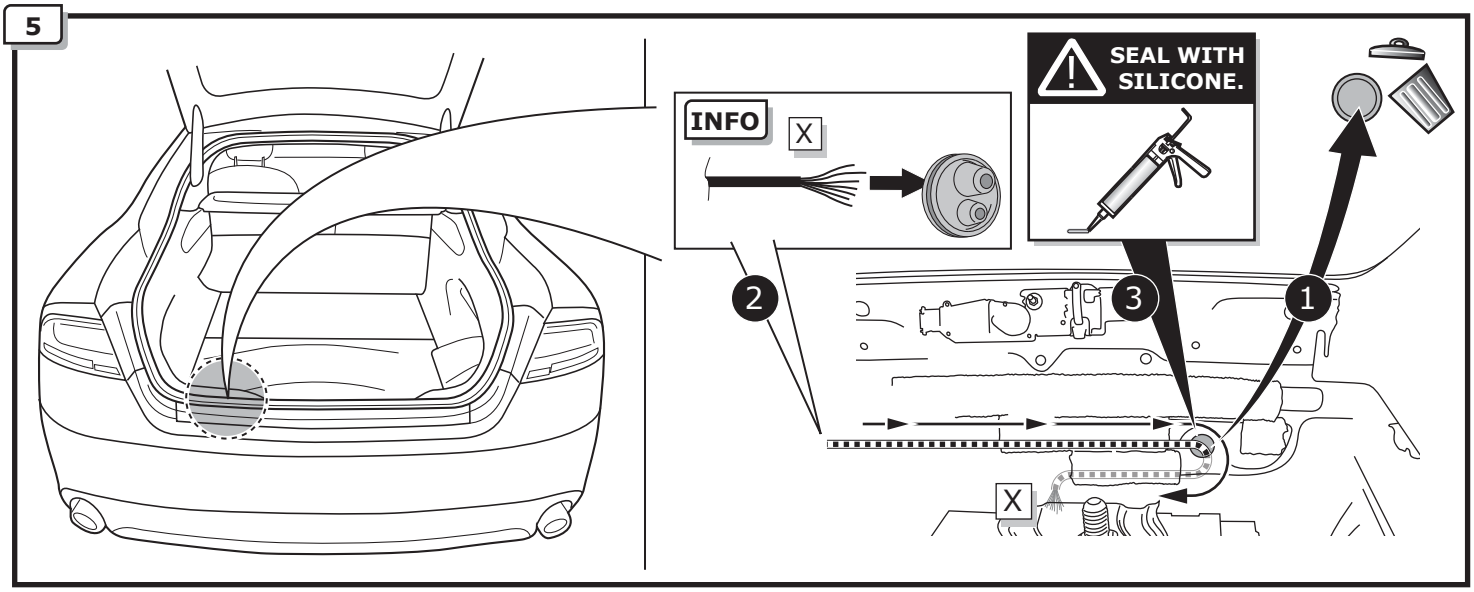

A6 Avant

6

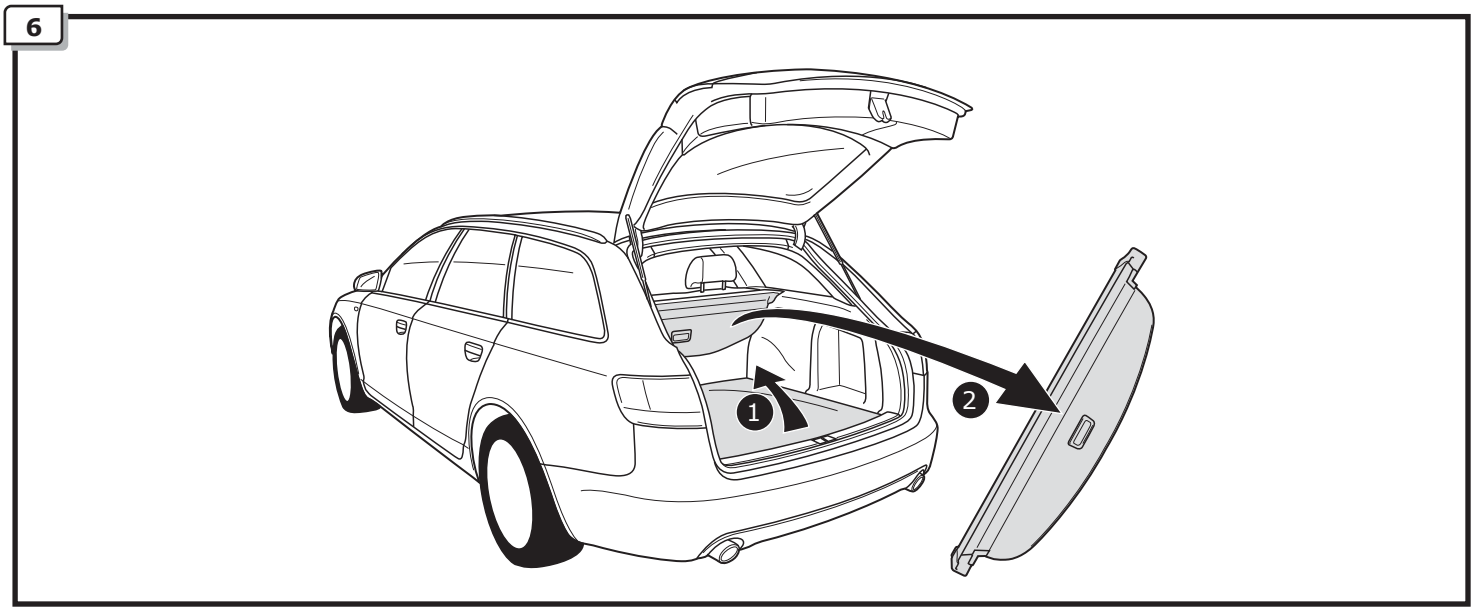

7

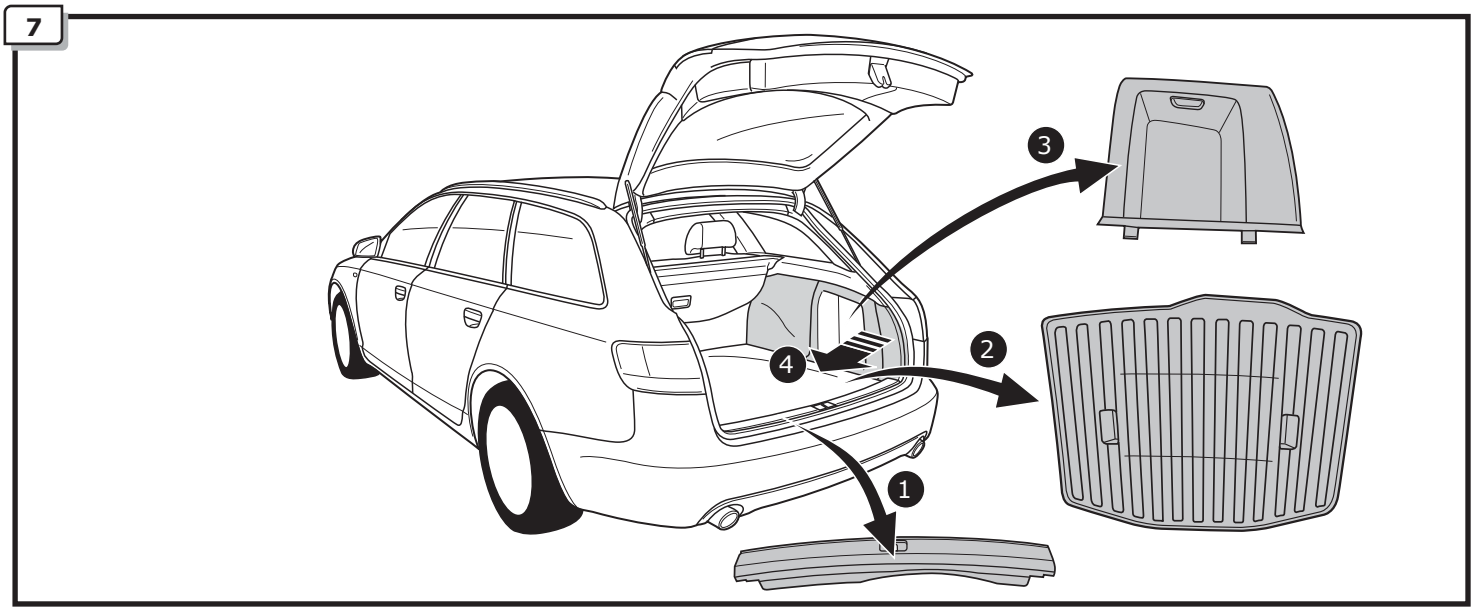

A6 Avant

8

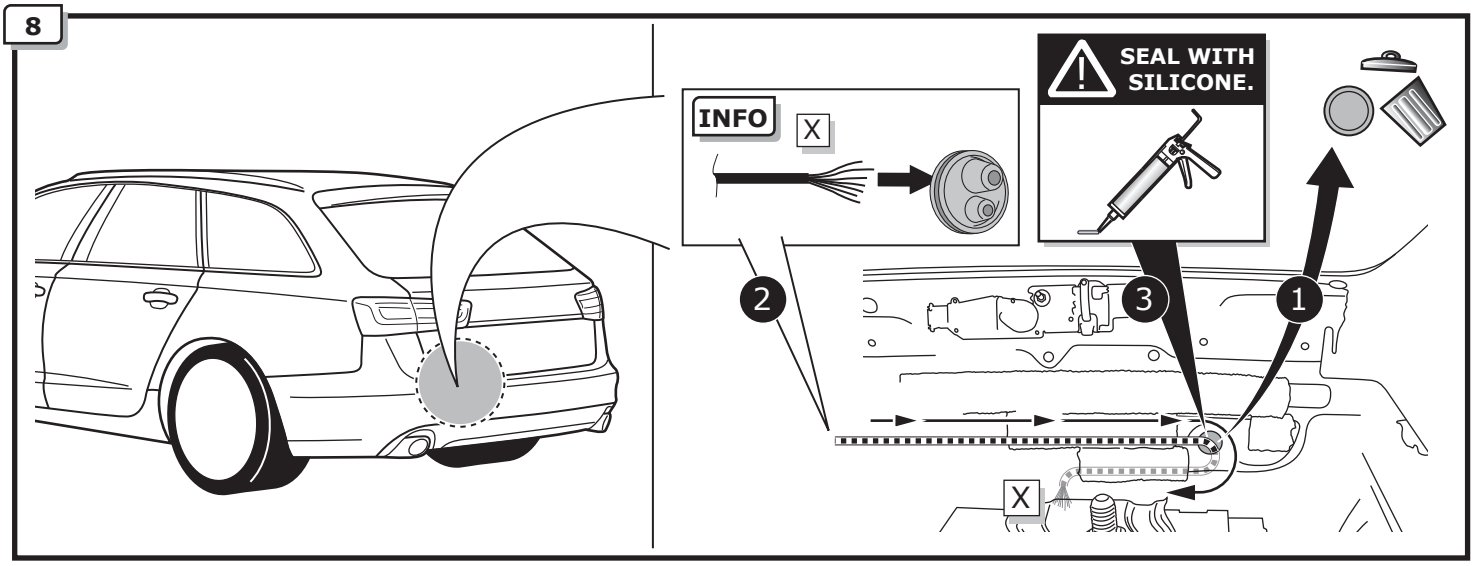

A6 Sedan / A7 Sportback / A6 Avant

A

Option 1

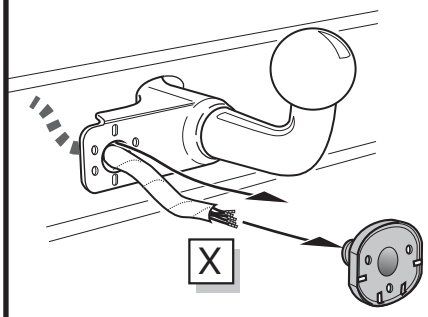

Option 2

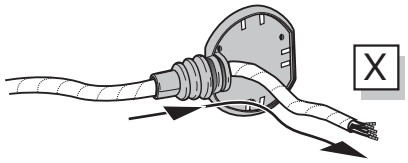

Option 3

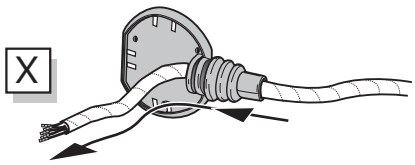

INFO

SOCKET CONNECTION

Pag. 18

B

Option 1

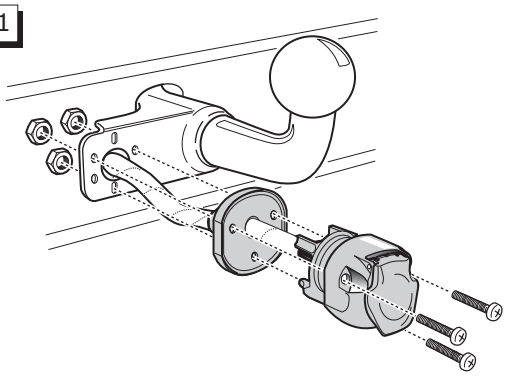

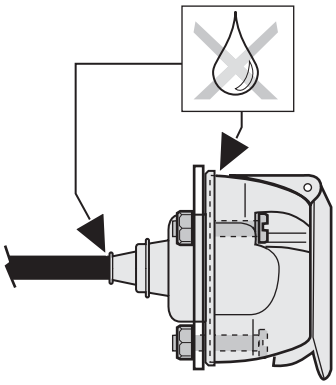

A6 Sedan / A7 Sportback / A6 Avant

C

Option 2

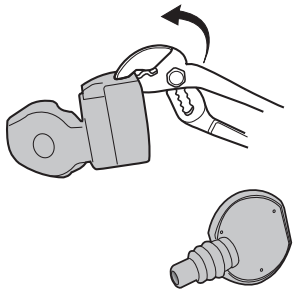

1

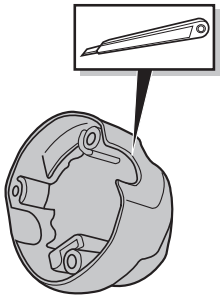

2

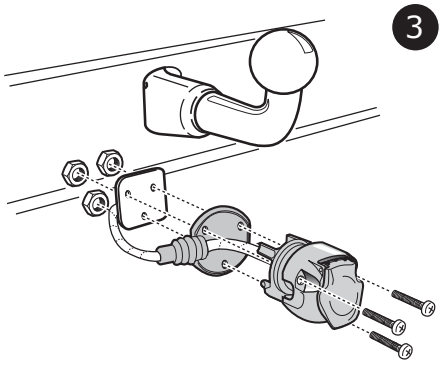

3

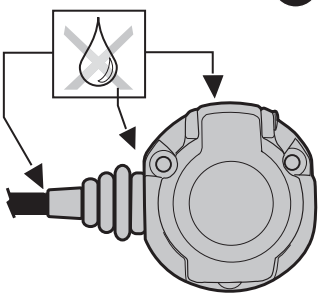

4

D

Option 3

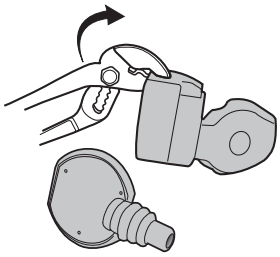

1

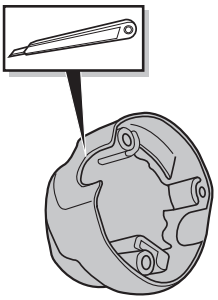

2

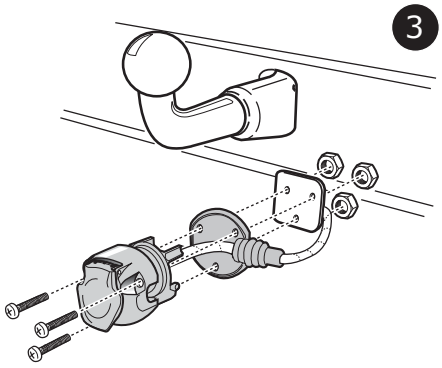

3

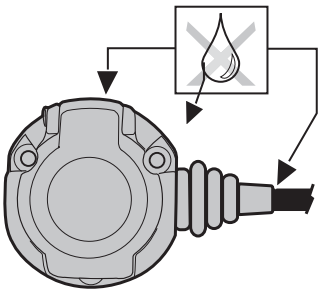

4

A6 Sedan / A6 Avant

9

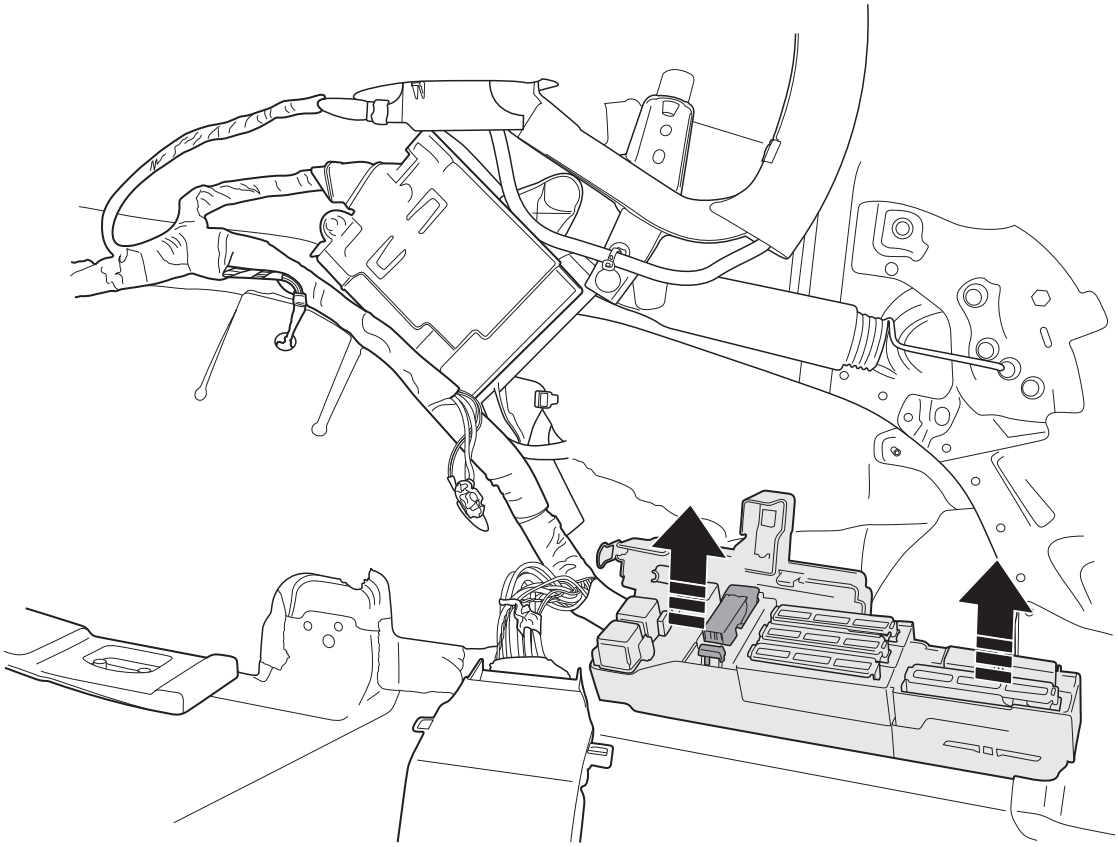

A7 Sportback

10

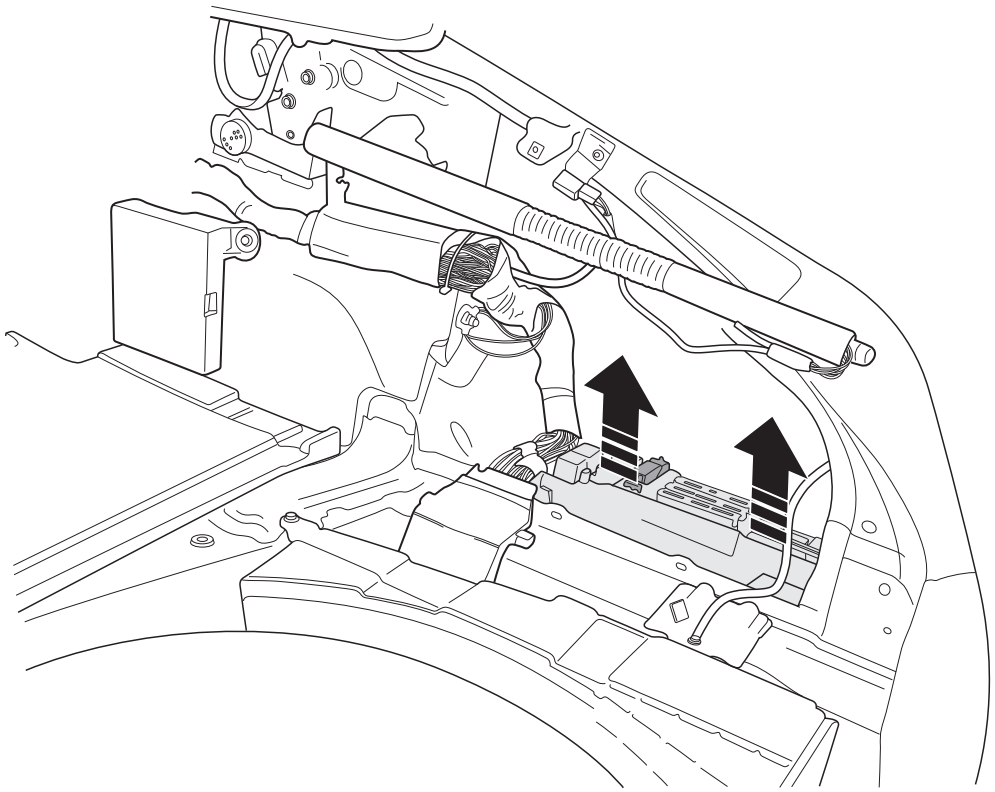

A6 Sedan / A7 Sportback / A6 Avant

11

CAN HIGH
CAN LOW

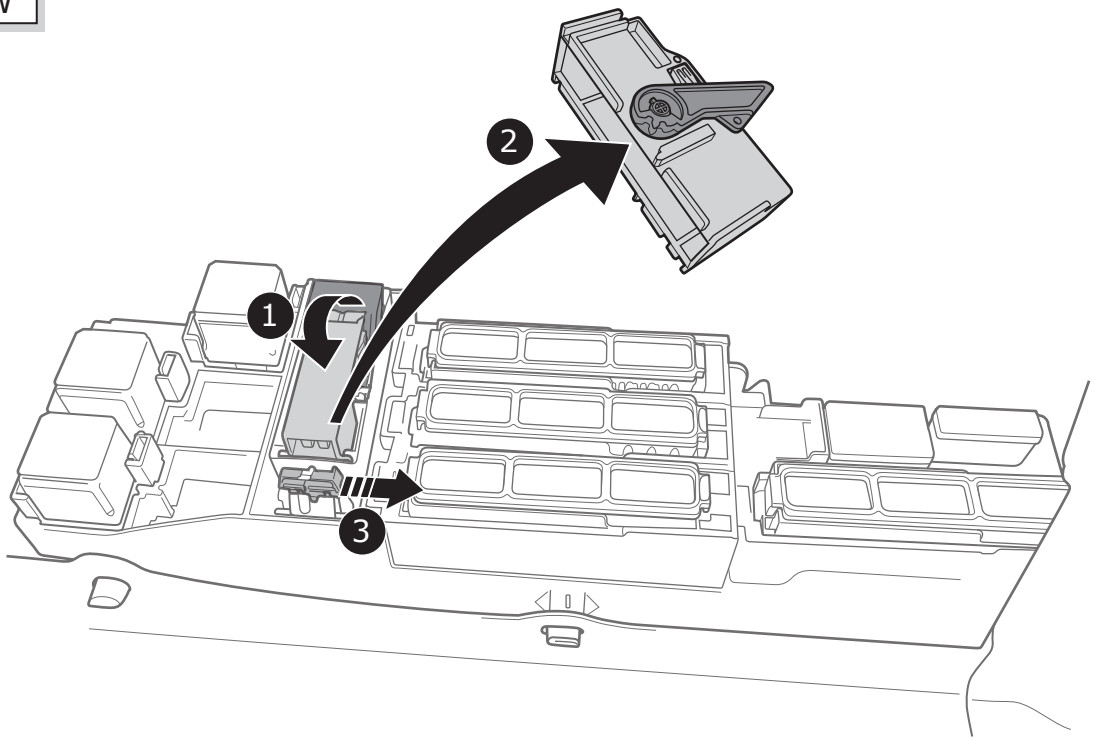

A6 Sedan / A7 Sportback / A6 Avant

12

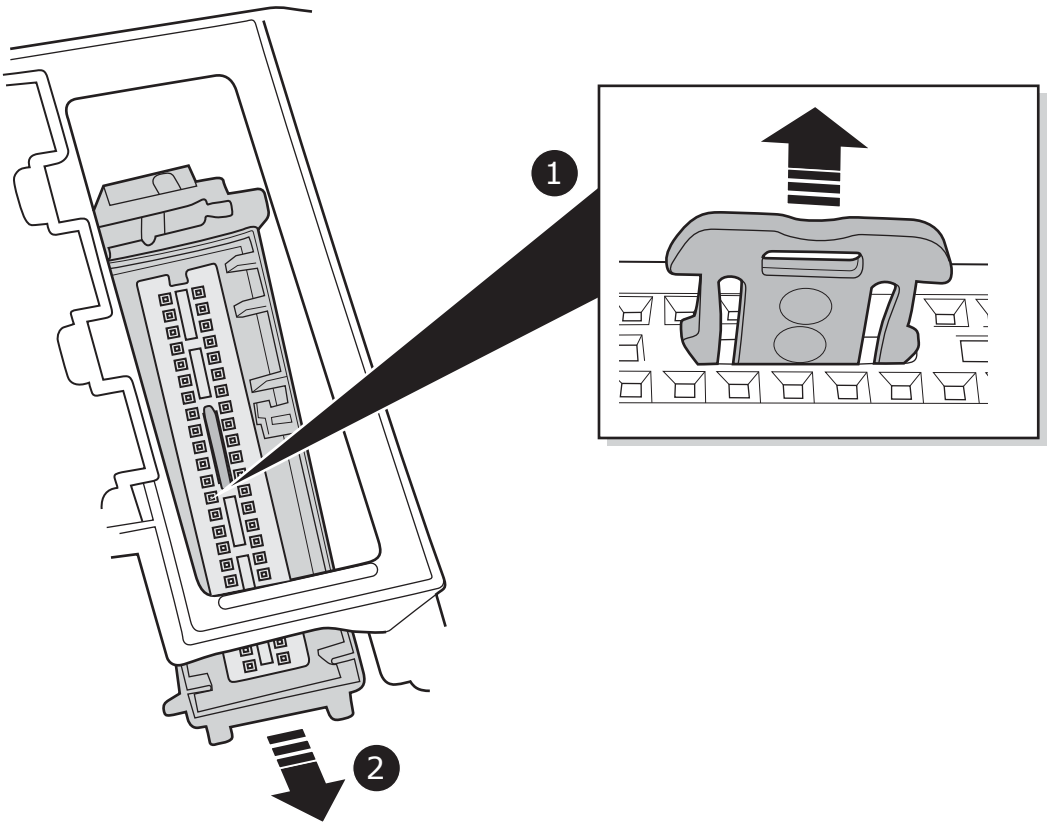

A6 Sedan / A7 Sportback / A6 Avant

13

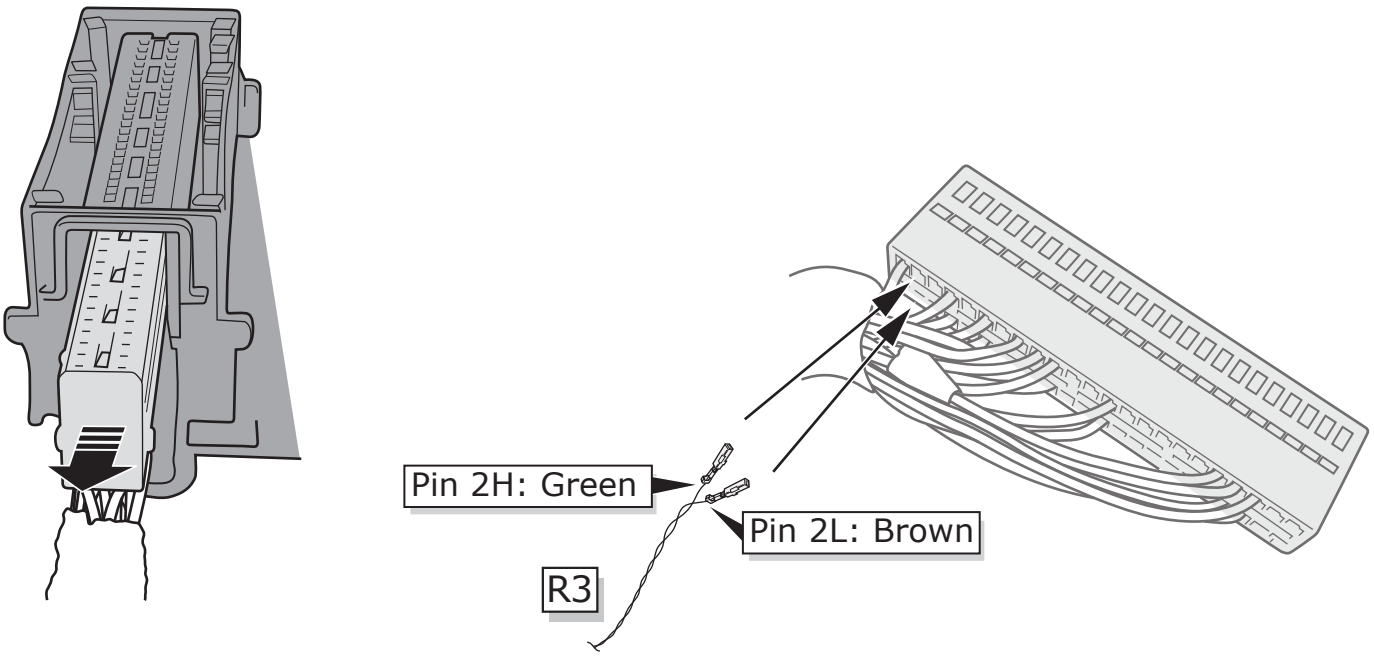

A6 Sedan / A7 Sportback / A6 Avant

14

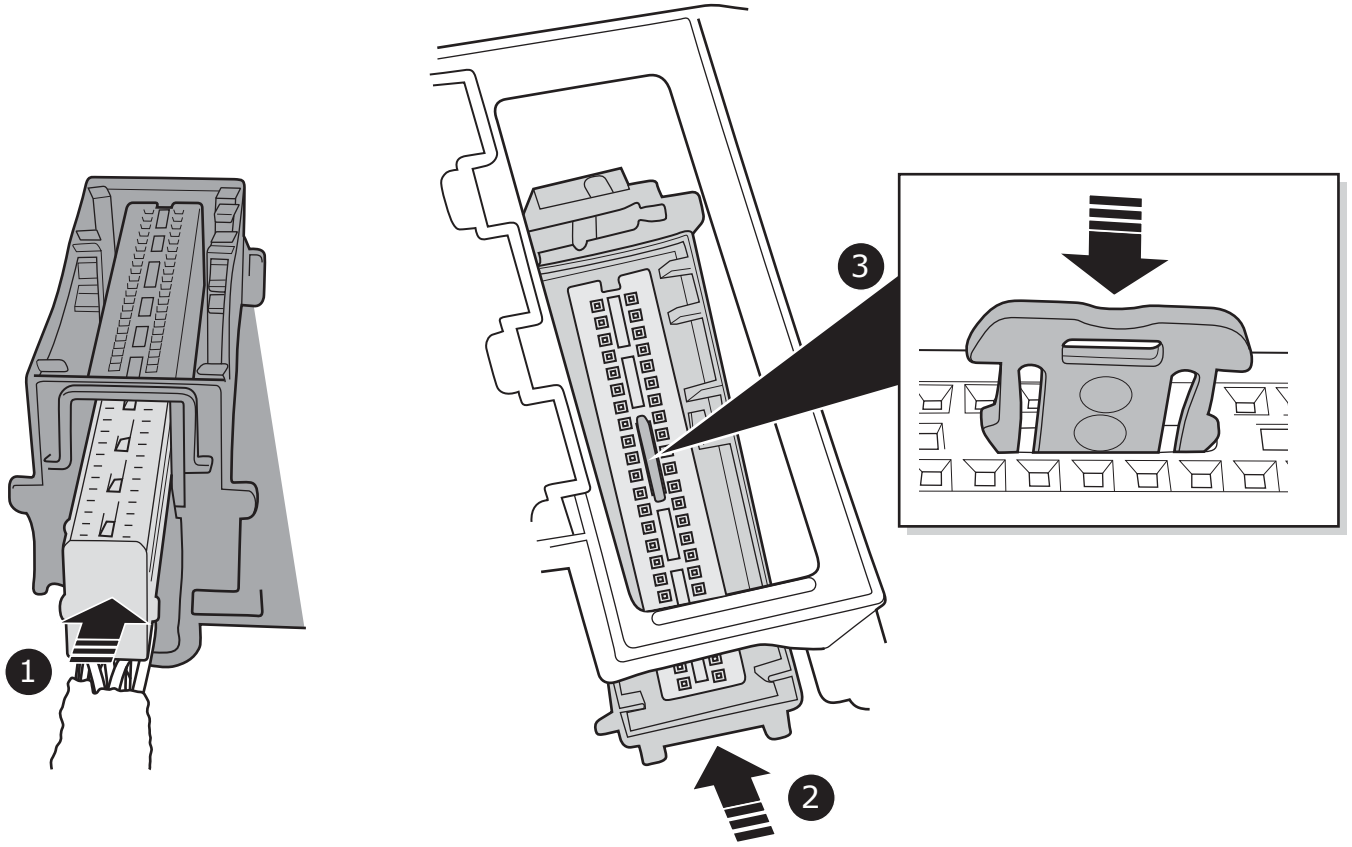

A6 Sedan / A7 Sportback / A6 Avant

15

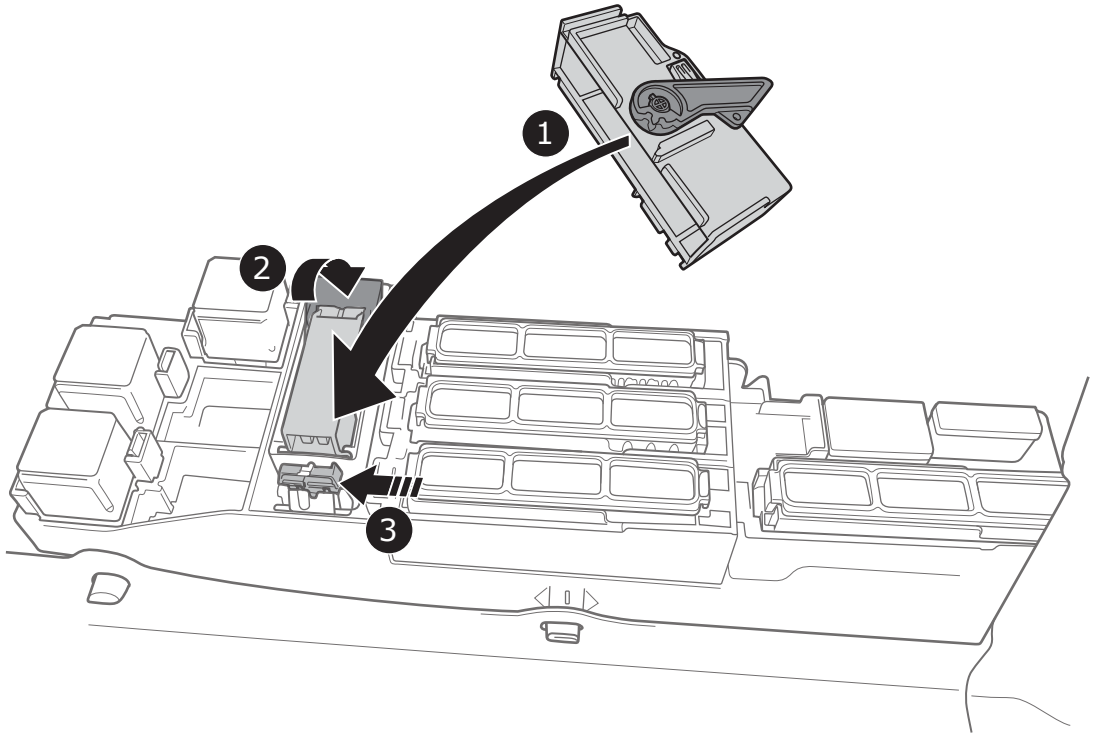

16

1

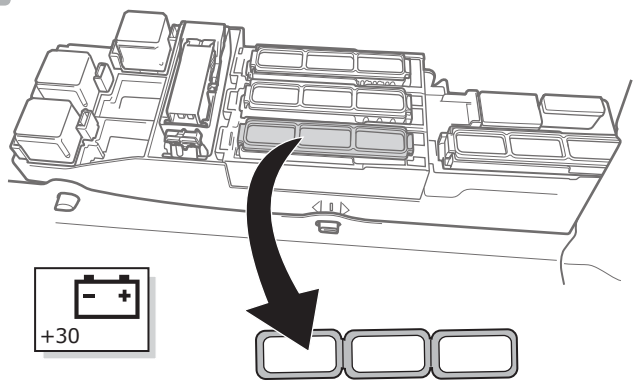

2

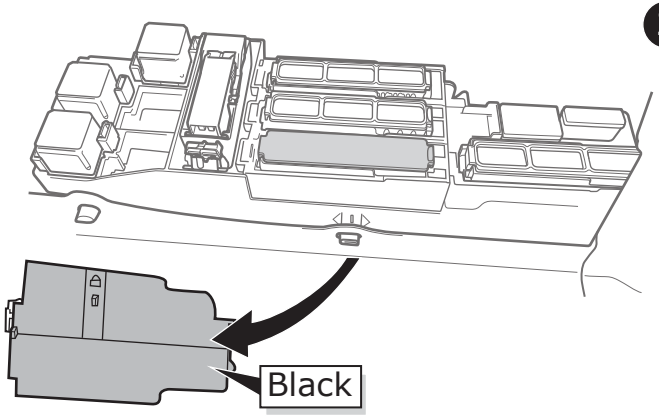

3

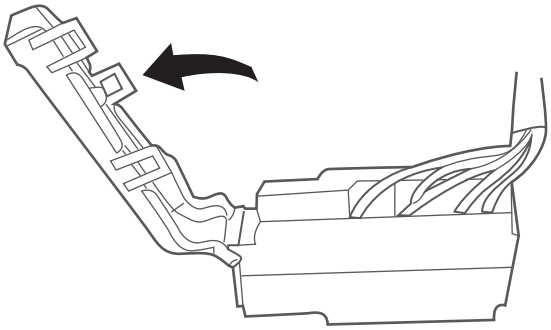

4

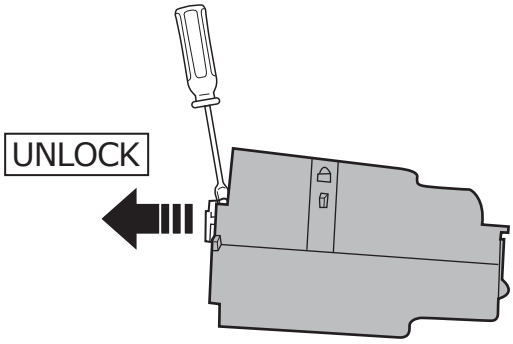

5

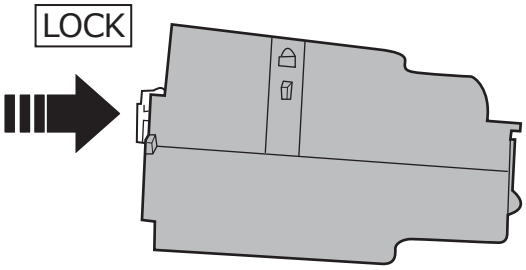

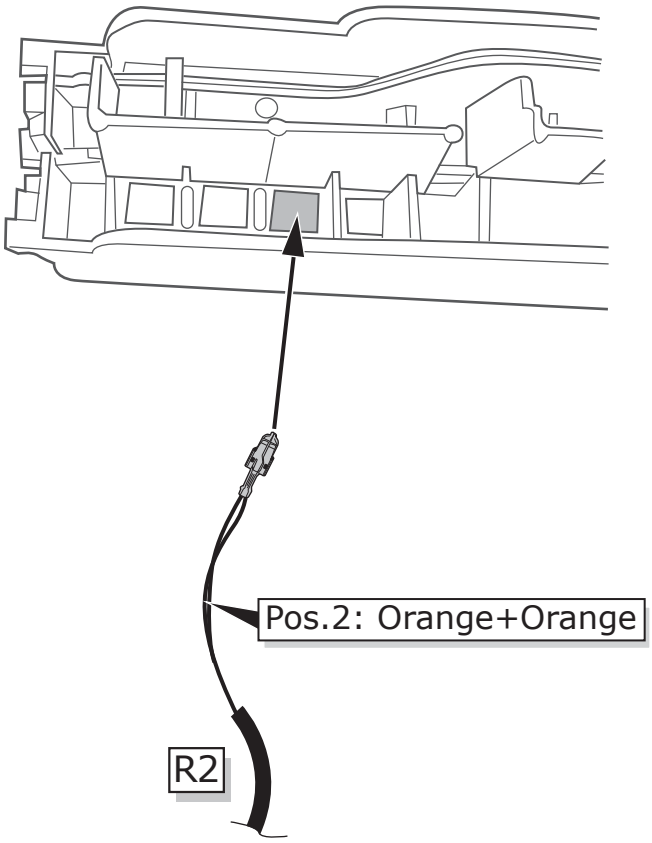

6

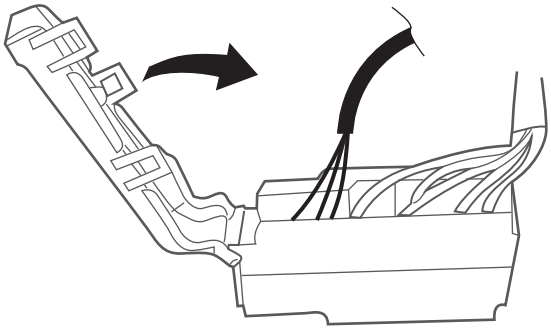

A6 Sedan / A7 Sportback / A6 Avant

17

1

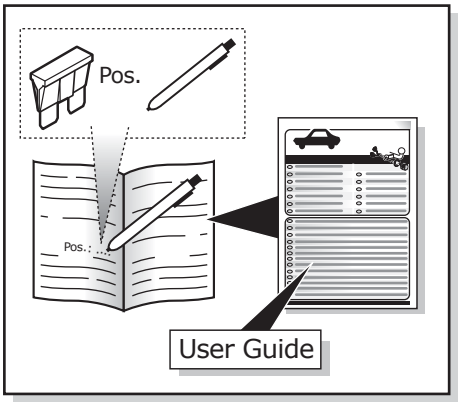

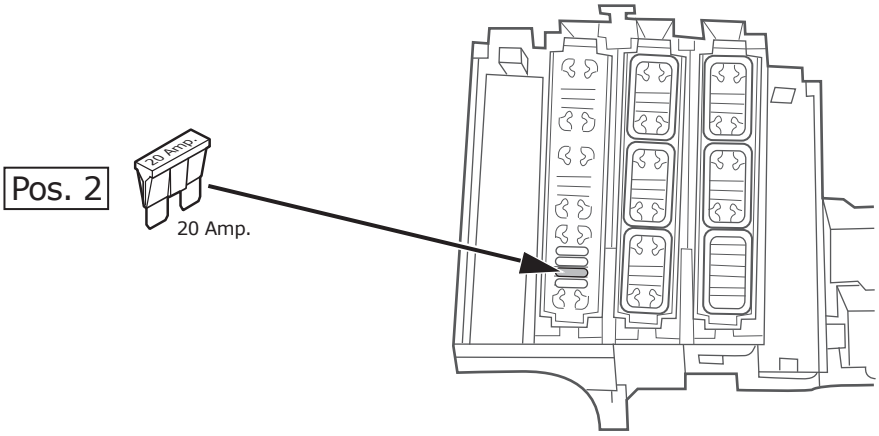

2

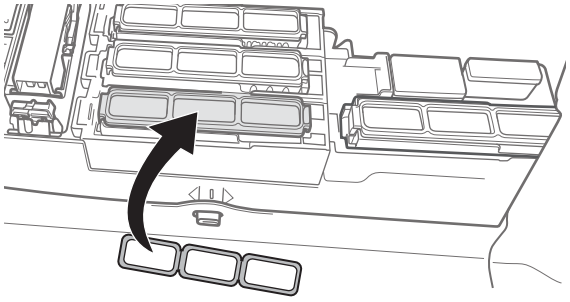

A6 Sedan / A6 Avant

18

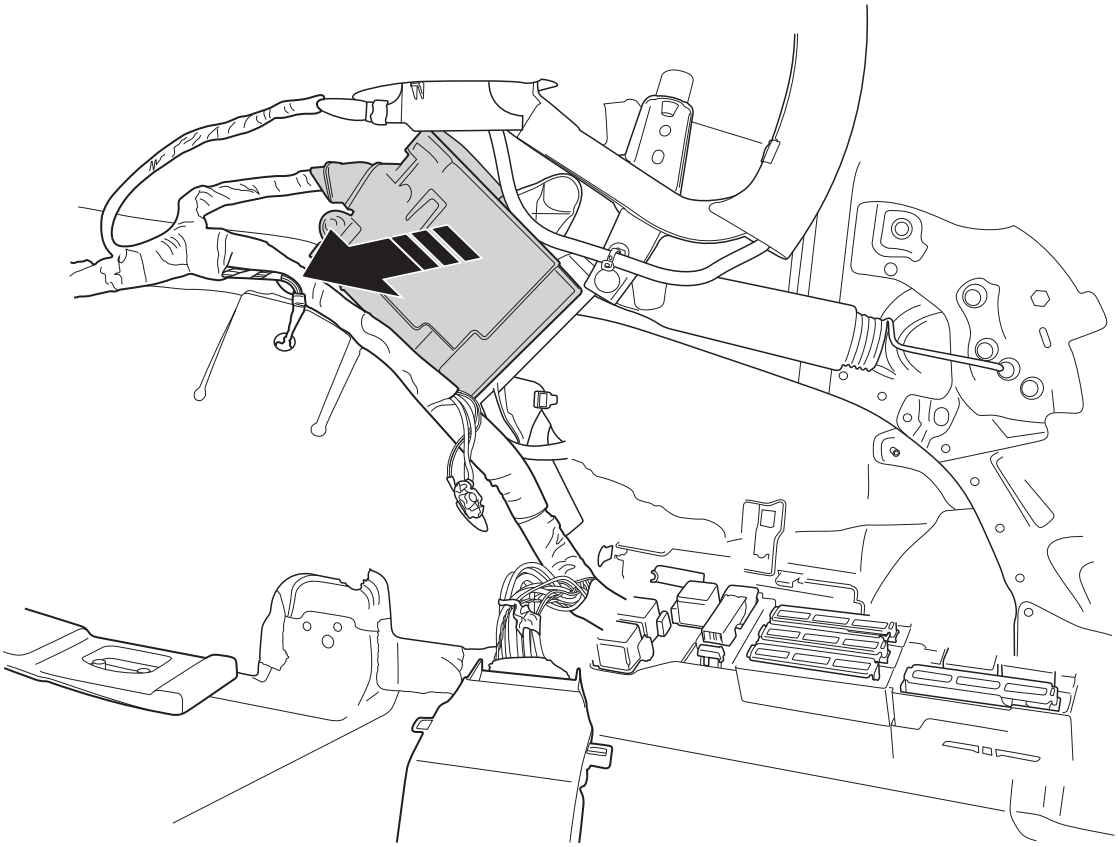

A7 Sportback

19

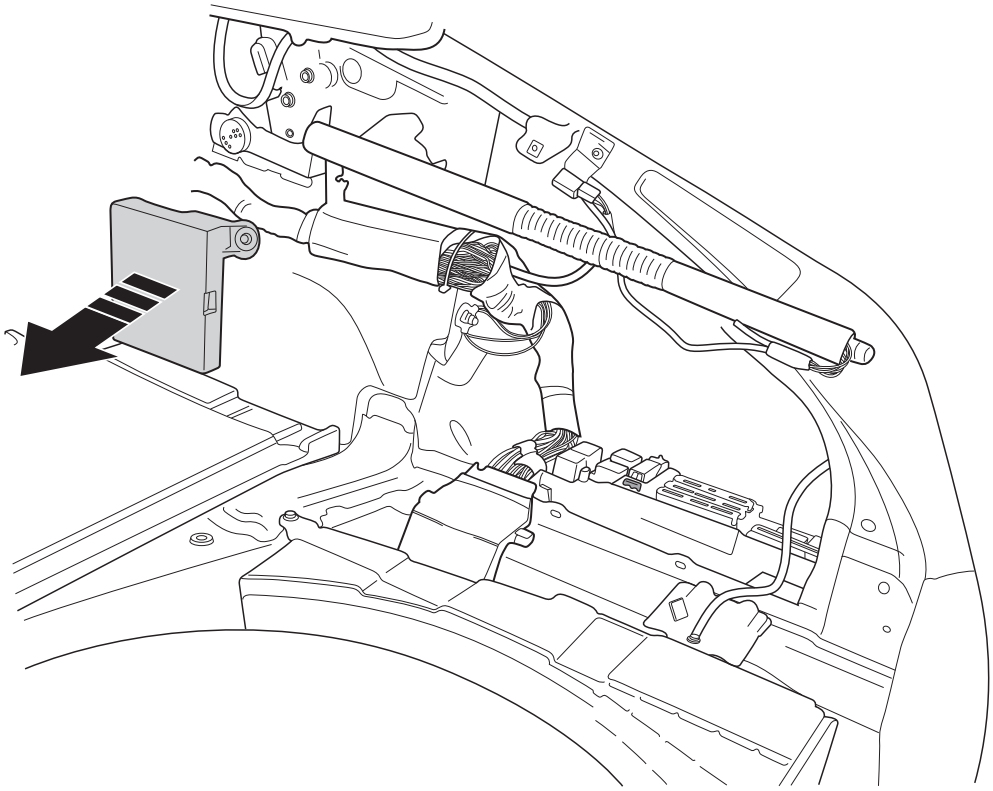

A6 Sedan / A7 Sportback / A6 Avant

20

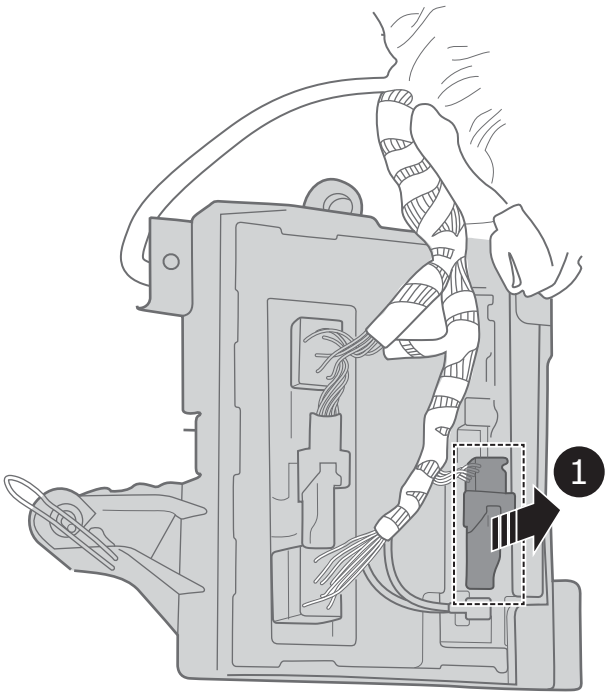

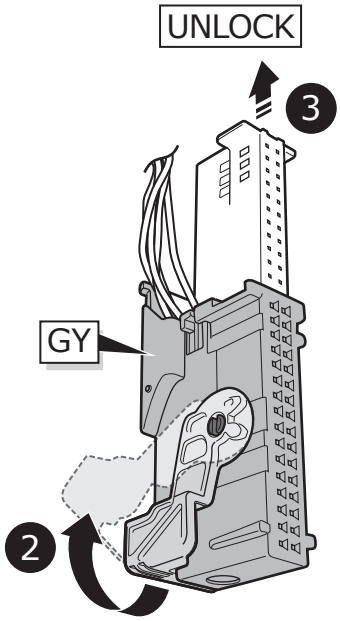

A6 Sedan / A7 Sportback / A6 Avant

21

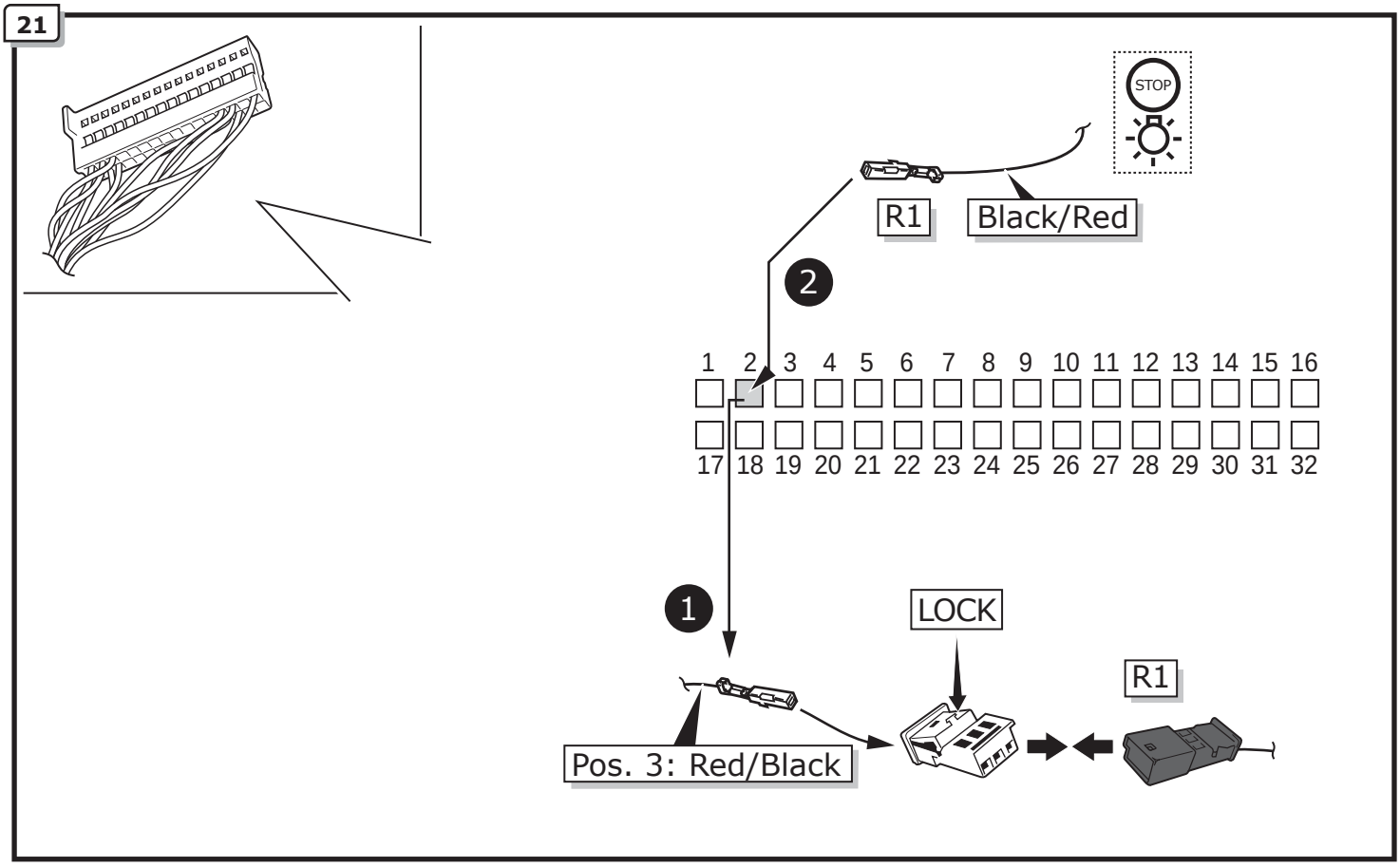

A6 Sedan / A6 Avant

22

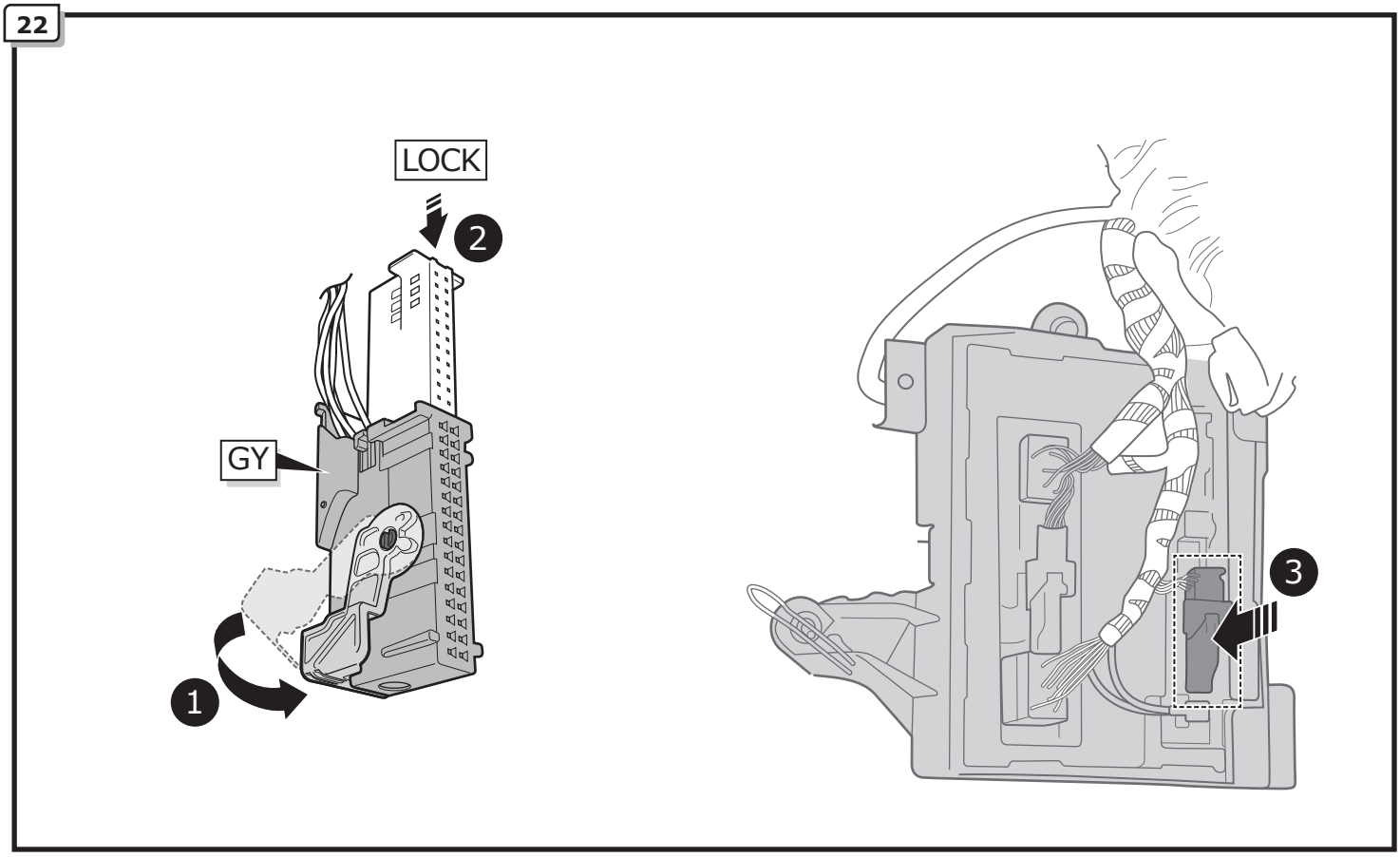

A6 Sedan / A7 Sportback / A6 Avant

23

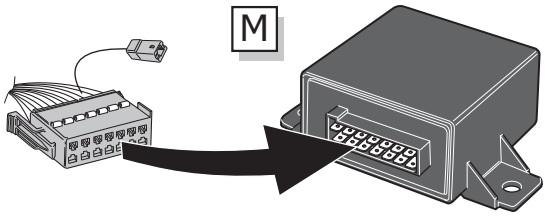

24

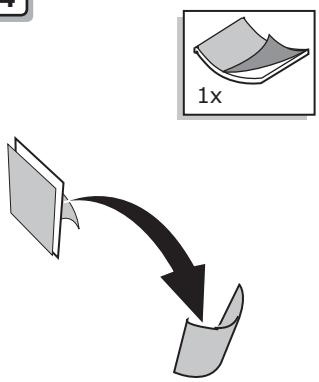

1

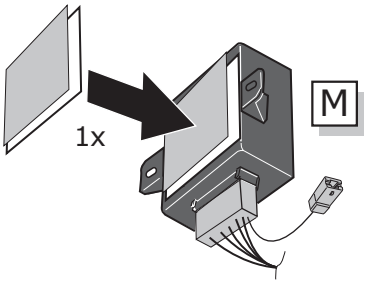

2

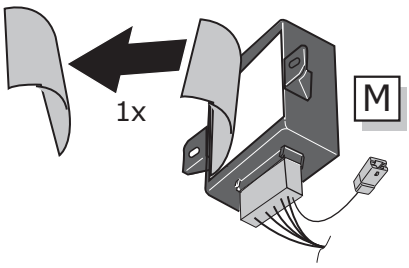

3

A6 Sedan / A7 Sportback / A6 Avant

25

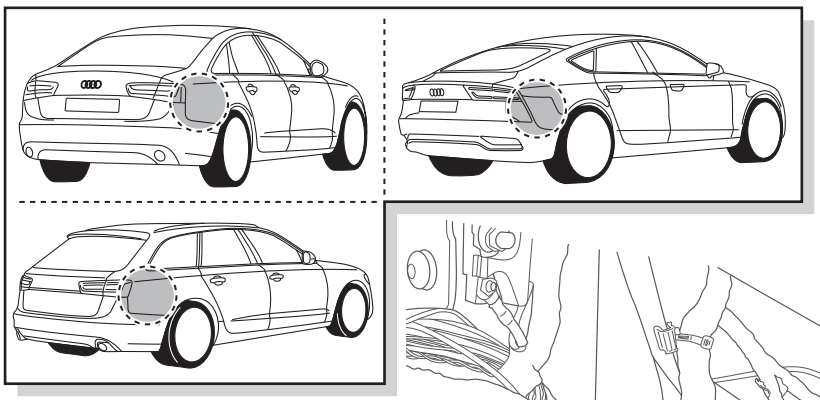

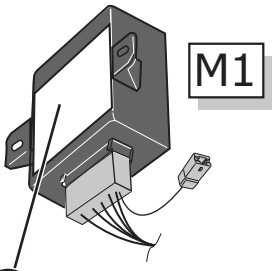

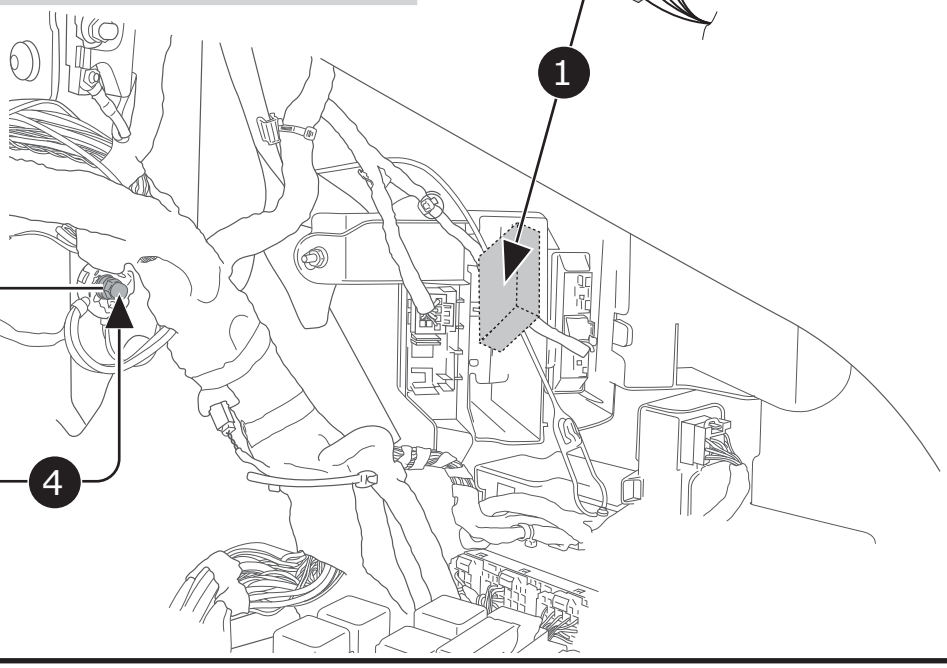

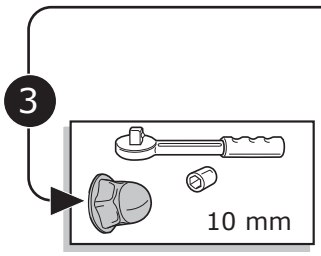

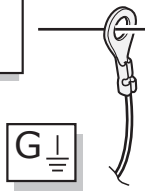

26

! TEST ALL THE CIRCUITS WITH A TEST DEVICE WITH THE CORRECT POWER LOAD FOR EACH FUNCTION. A TEST DEVICE WITH LED'S CANNOT BE USED FOR THIS PURPOSE.

27

With a VAG Service tester with the help of SVM code '050200'
the software of the vehicle must be adjusted to trailer coupling converted D12.

28

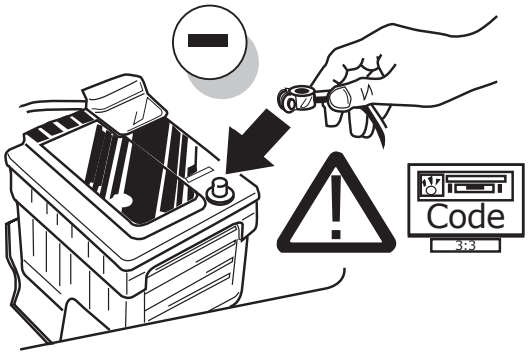

29

REINSTALL TRIM.

30

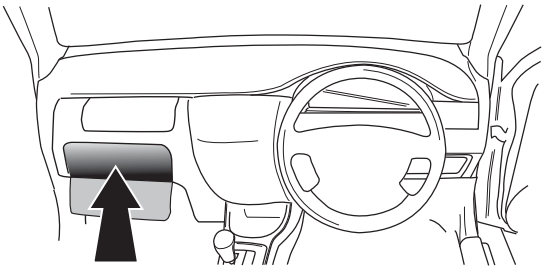

! 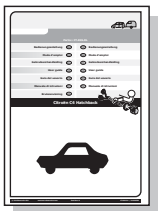

User guide

© ECS Electronics B.V.

INFO

SOCKET CONNECTION

DIN/ISO 1724	⇦	🚗	⏚ 1-7	⇨	☼	STOP	☼
	1/L	2	3/31	4/R	5/58-R	6/54	7/58-L
Pmax	21W	21W		21W	42W	3x21W	42W
Colour	Black/ White	Blue	Brown	Black/ Green	Grey/ Red	Black/ Red	Grey/ Black

Reverse signal preparation

A

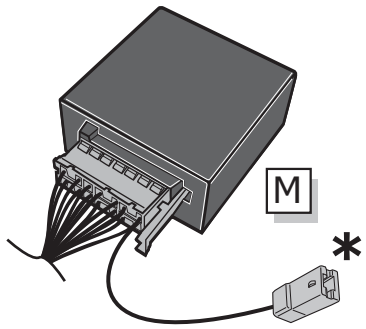

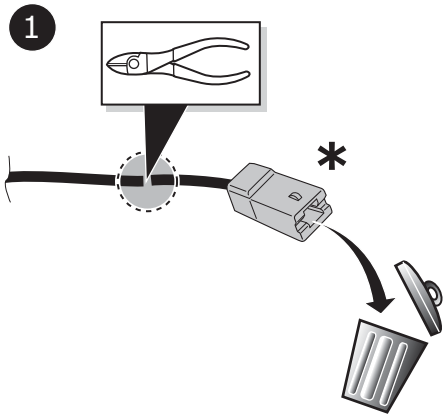

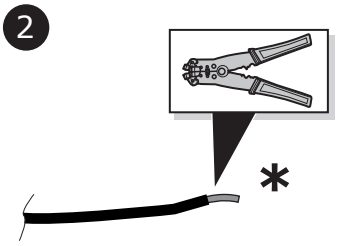

B
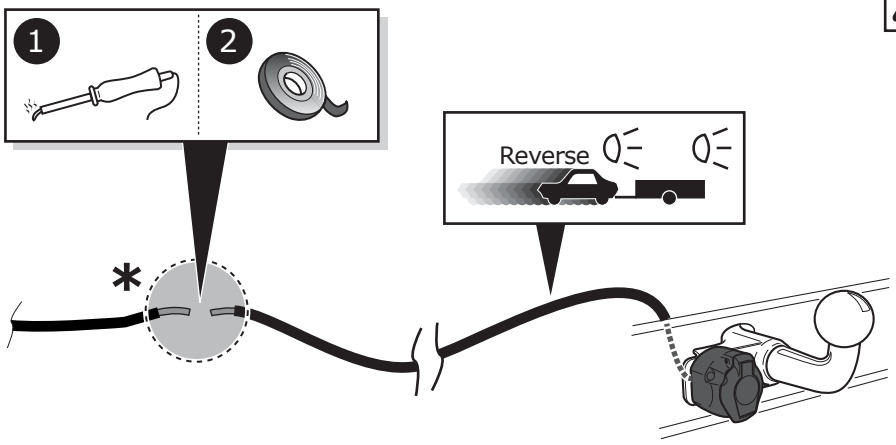
⚠ MAX = 21W