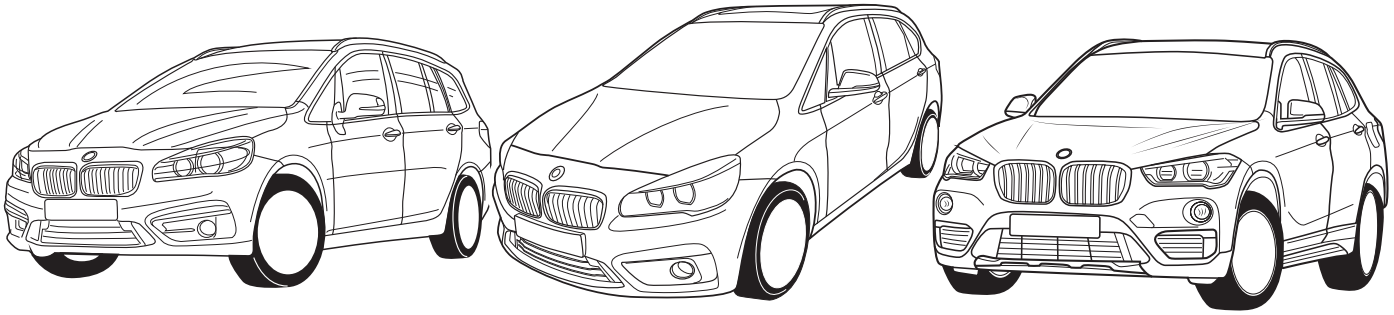

**BMW**

| | |
|---|---|
| **2 series Active Tourer F45** | **09/14 >>** |
| **2 series Gran Tourer F46** | **06/15 >>** |
| **X1 F48** | **10/15 >>** |
| **X2 F39** | **03/18 >>** |

**Part No: BW-027-07MU**

## Electric wiring kit for towbars / 7-pin / 12N / 12 Volt / ISO 1724

# Fitting instructions

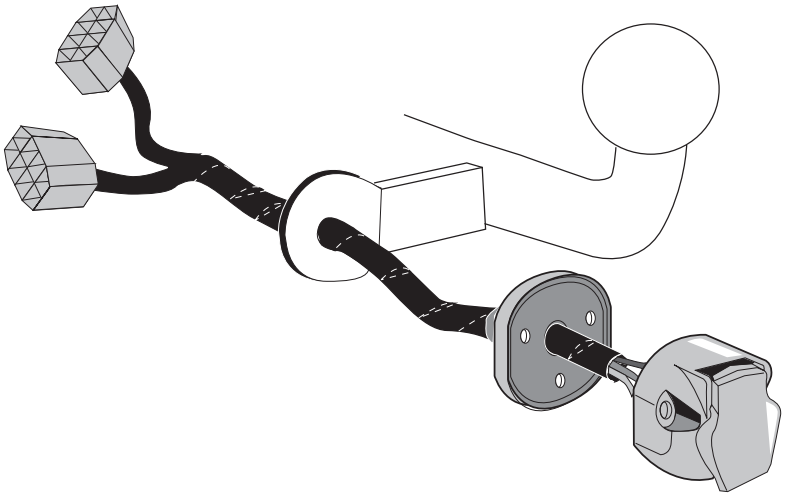

## IMPORTANT!

This electric kit has to be installed by a professional workshop or a suitable qualified person.
The installation instructions must have been read and fully understood before the start of any installation. Please contact your wiring kit provider or the hotline shown in the footer should you need assistance!
Make sure the vehicle is approved/homologated by the manufacturer to tow a trailer!
Also please check that there is a definite compatibility between this vehicle and the electric kit!
Following the installation of the electric kit, the fitting instructions should be kept together with the vehicle service document and vehicle handbook. The fitting instructions contain important information relating to the use and function of the towing kit as well as for any diagnostic or activation process, that might have to be repeated in the future (e.g. after the performance of a vehicle software update).
All warranty claims will be forfeited if the electric kit or components contained therein are used incorrectly or modified. If a towing socket adaptor has been used to connect to the trailer or bike rack, this must be removed from the trailer socket once the trailer or bike rack has been disconnected.
If the trailer or bike rack is not equipped with a rear fog lamp, depending on the towing vehicle type, the correct function of the towing kit cannot be guaranteed. In such cases, a rear fog lamp should be retro fitted.
This towing electric kit will not be covered under warranty if any technical or electrical modifications or software updates have been performed by the vehicle manufacturer after the initial commissioning of the kit. That applies especially to modifications or updates which may cause malfunctions in the trailer socket or any other part of the trailer electrical equipment!
Depending on the type of trailer module used in this electric kit, diagnostic interrogation with the vehicle's electrical system may be limited or will not function. The error memory inside the trailer module may not be able to be accessed by vehicle manufacturers diagnostic system.
Error logs relating to the trailer electrical equipment, that may be generated in the vehicle manufacturers diagnostic system as a result of a test procedure, may be due to the incorrect installation of the towing electric kit or the false activation of the trailer module.
**We always recommend whenever possible, the following troubleshooting process:**

- **An analysis of the vehicle's error memory and possibly clearing of all faults before the start of the installation!**
- **Try disconnecting the trailer module from the towing harness and re-start the fault clearing process!**
- **If in doubt, limit the time for troubleshooting to a max of 0,5 hours and call our Technical Support Team!**

Please follow our instructions carefully and always test the towing electrics using a true lighting board or a specifically designed bulb tester. If an LED tester is used, ensure it is equipped with correct load resistors or malfunctions will occur!
This instruction is subject to changes and we reserve the right to make changes to design, colour etc.
All of the data and illustrations may not be an exact representation but the text contained in this instruction must be observed!



ECS Electronics UK
The Old Dyehouse
Macclesfield
Cheshire, SK11 7RN UK

SALE: +44 (0) 7980 847124
TECHNICAL: +44 (0) 7440 202052
WEB: www.ecs-electronicsuk.co.uk

Email-sales: n.lea@ecs-electronics.com
Email-technical: t.skinner@ecs-electronics.com

Revision: 2 / 17.01.2019
BW-027-07MU

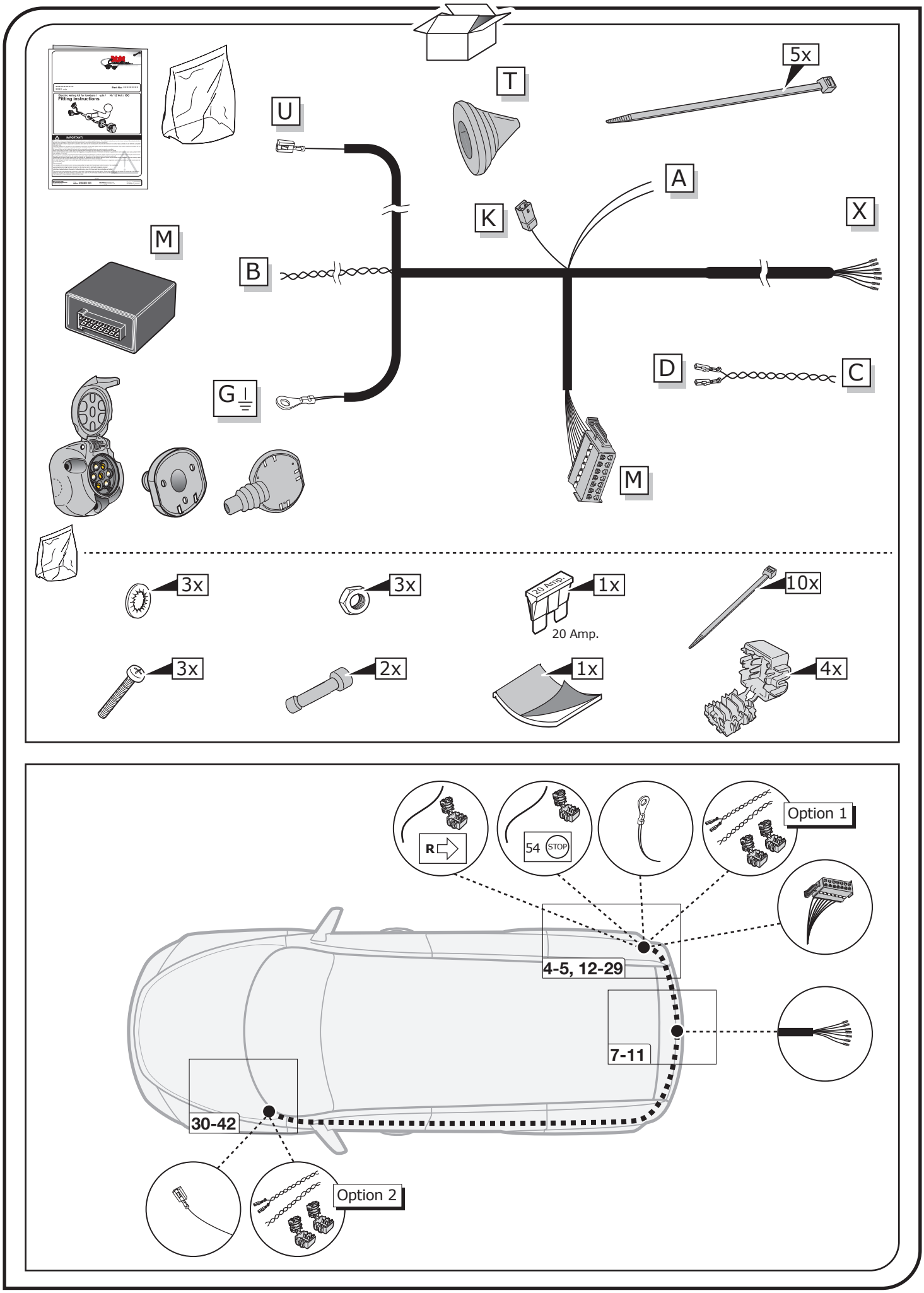




ECS Electronics UK
The Old Dyehouse
Macclesfield
Cheshire, SK11 7RN UK

SALE: +44 (0) 7980 847124
TECHNICAL: +44 (0) 7440 202052
WEB: www.ecs-electronicsuk.co.uk

Email-sales: n.lea@ecs-electronics.com
Email-technical: t.skinner@ecs-electronics.com

Revision: 2 / 17.01.2019
BW-027-07MU

## SYMBOL EXPLANATION

| | |
|---|---|
| | Left (58-L) respectively Right (58-R) tail light |
| 54 STOP | Stop light (54) / high mounted, third stop light (54) |
| L | Turn signal indicator left |
| R | Turn signal indicator right |
| | Rear fog light(s) |
| Reverse | Reversing light(s) |
| 30+ | Permanent power supply / 13pin socket, chamber 9 |
| 15+ | Charging wire for trailer battery / 13pin socket, chamber 10 |
| | Trailer / trailer recognition |
| B+/30 | Permanent current power supply |
| | Ground or Earth (31) |
| | Ground connection battery terminal lug |
| | Positive connection battery terminal lug |

| | |
|---|---|
| 12V | Cigarette lighter / accessory socket |
| | Loudspeaker / buzzer |
| | Park Distance Control |
| | Switch / source of function |
| | Connect together |
| | Disconnect |
| | Look at / See further information |
| | Look carefully at selected area |
| | Present / Occupied / OK |
| | Not present / Not occupied / Not OK |
| | Acoustic indication |
| | Attention / important advice |
| 20 Amp. | Fuse / fuse capacity 20 Ampère |

## TOOLS

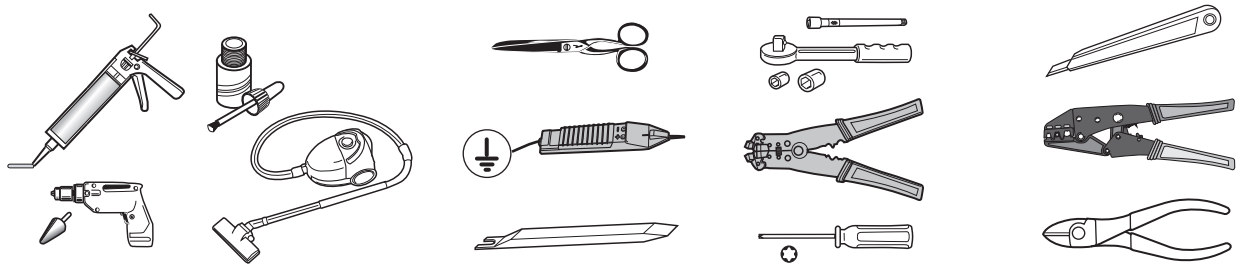

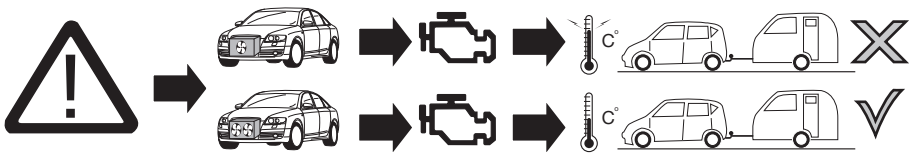


## ATTENTION!

The vehicle's cooling capacity may have to be increased when retrofitting a trailer coupling!
You must observe the manufacturer's instructions!!

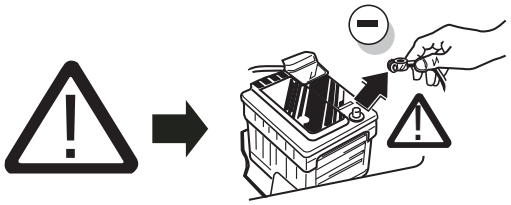

Note: It may be necessary to check if this vehicle has a stored radio code before disconnecting the battery!

**ATTENTION!**

In order to avoid mal-functions and damage to the vehicle's electrical system the earth terminal **must be disconnected** from the vehicle's battery **before starting work!**

Both the trailer module and the vehicle's control unit for the electrical system can be damaged during work on the data bus connections if the battery is not disconnected!

Please pay attention to the manufacturer's instructions when disconnecting and reconnecting the vehicle's battery!

1



ECS Electronics UK
The Old Dyehouse
Macclesfield
Cheshire, SK11 7RN UK

SALE: +44 (0) 7980 847124
TECHNICAL: +44 (0) 7440 202052
WEB: www.ecs-electronicsuk.co.uk

Email-sales: n.lea@ecs-electronics.com
Email-technical: t.skinner@ecs-electronics.com

Revision: 2 / 17.01.2019
BW-027-07MU

## BMW

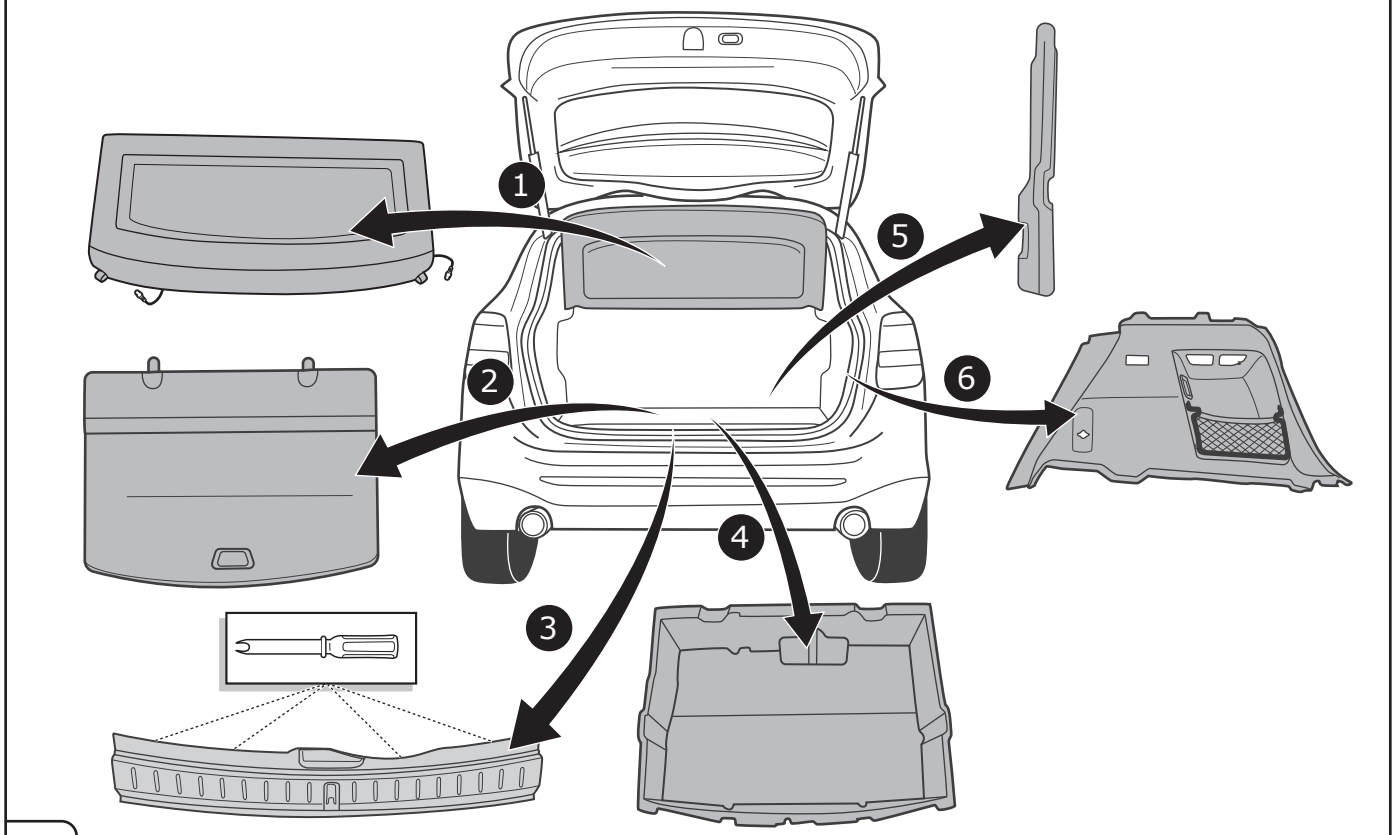


2

## BMW

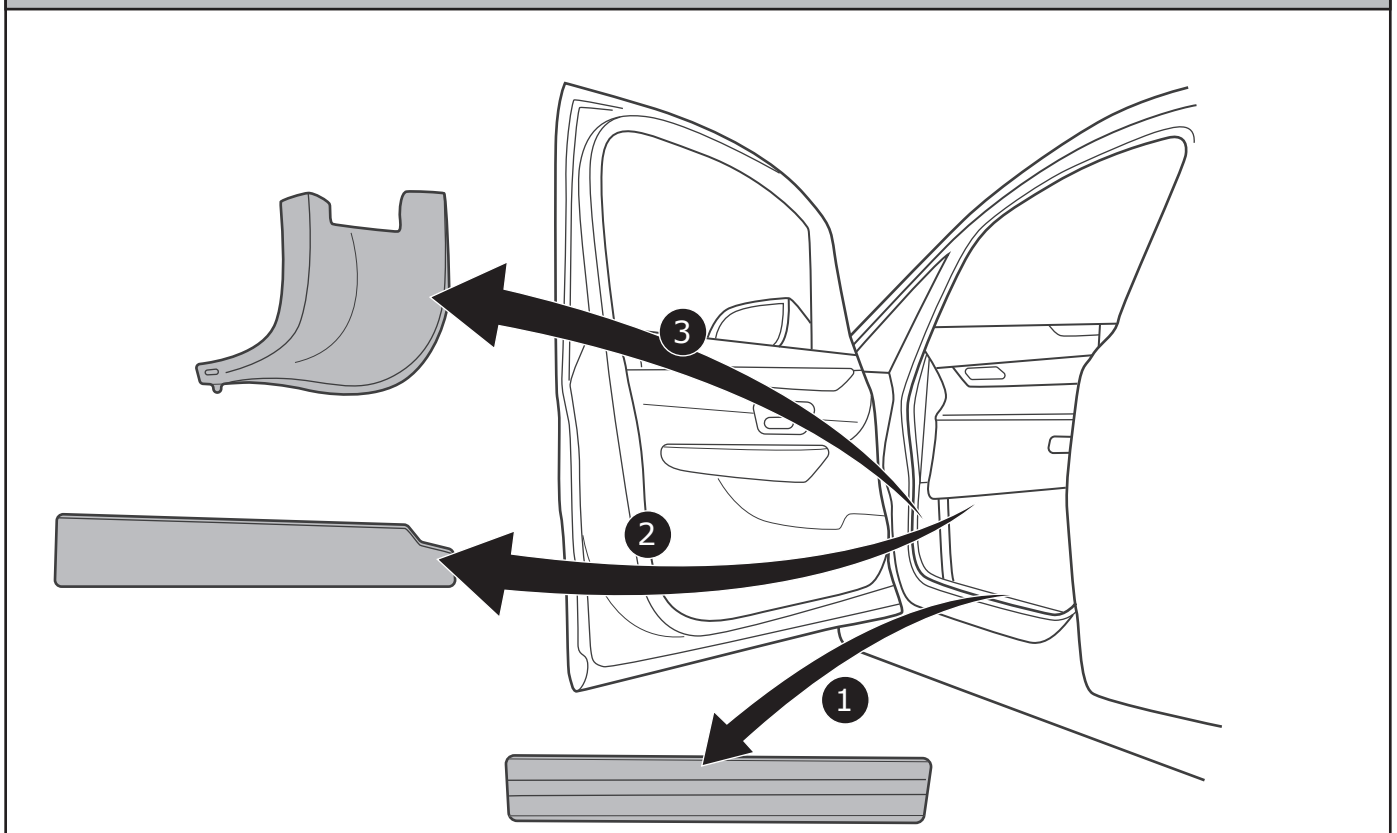


3



ECS Electronics UK
The Old Dyehouse
Macclesfield
Cheshire, SK11 7RN UK

SALE: +44 (0) 7980 847124
TECHNICAL: +44 (0) 7440 202052
WEB: www.ecs-electronicsuk.co.uk

Email-sales: n.lea@ecs-electronics.com
Email-technical: t.skinner@ecs-electronics.com

Revision: 2 / 17.01.2019
BW-027-07MU

## BMW F45 / F46

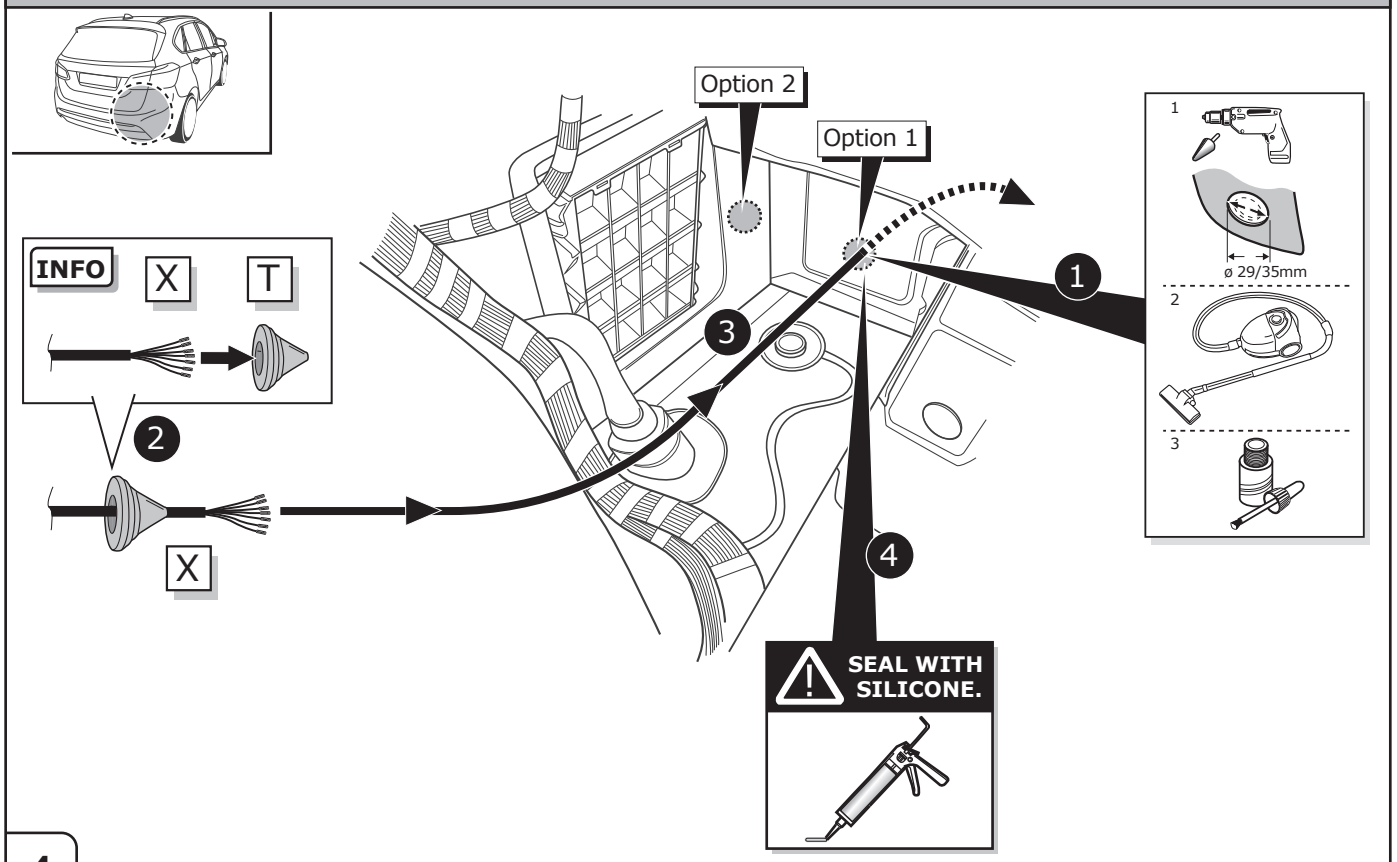


4

## BMW F48 / F39

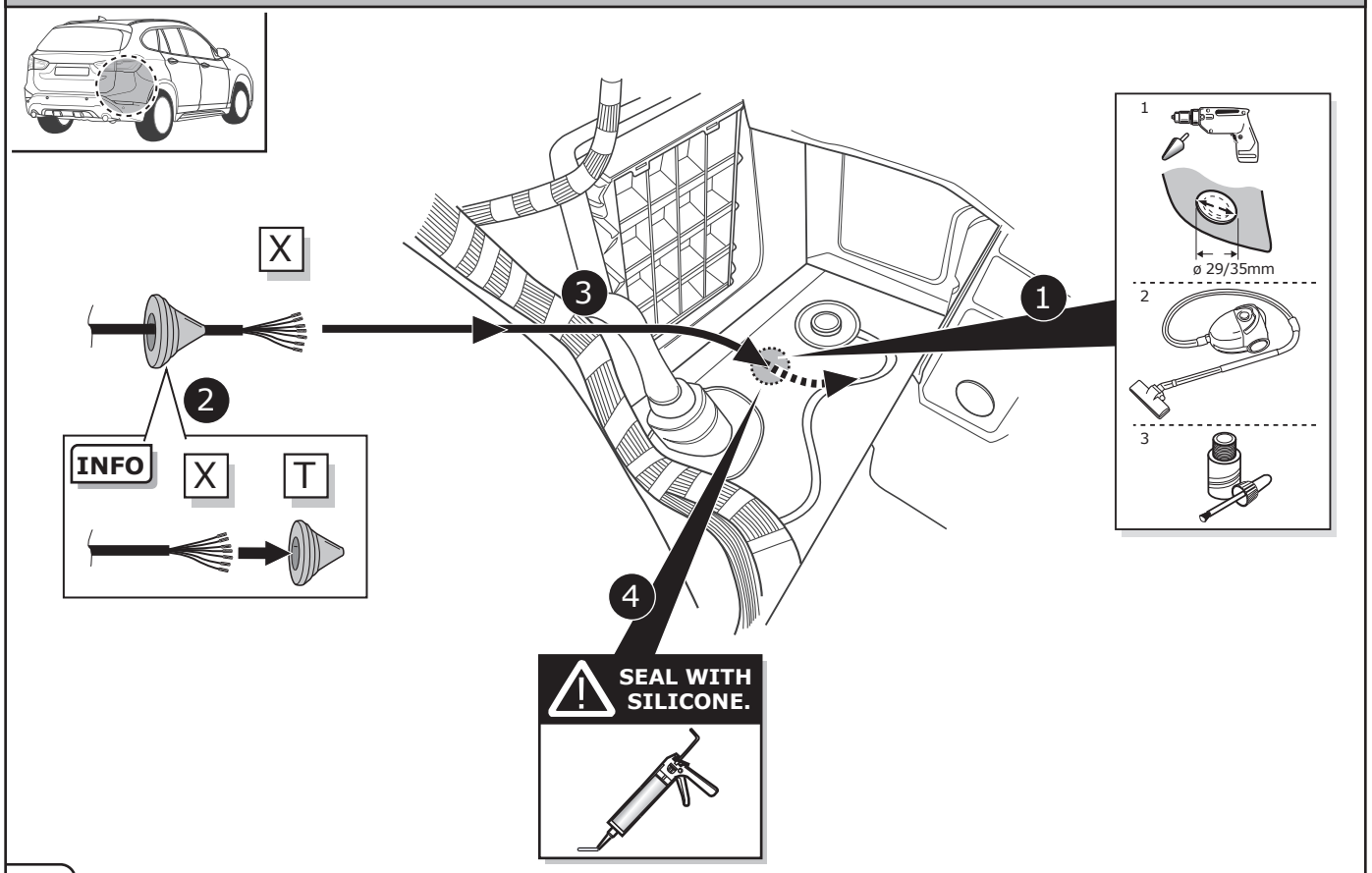


5



ECS Electronics UK
The Old Dyehouse
Macclesfield
Cheshire, SK11 7RN UK

SALE: +44 (0) 7980 847124
TECHNICAL: +44 (0) 7440 202052
WEB: www.ecs-electronicsuk.co.uk

Email-sales: n.lea@ecs-electronics.com
Email-technical: t.skinner@ecs-electronics.com

Revision: 2 / 17.01.2019
BW-027-07MU

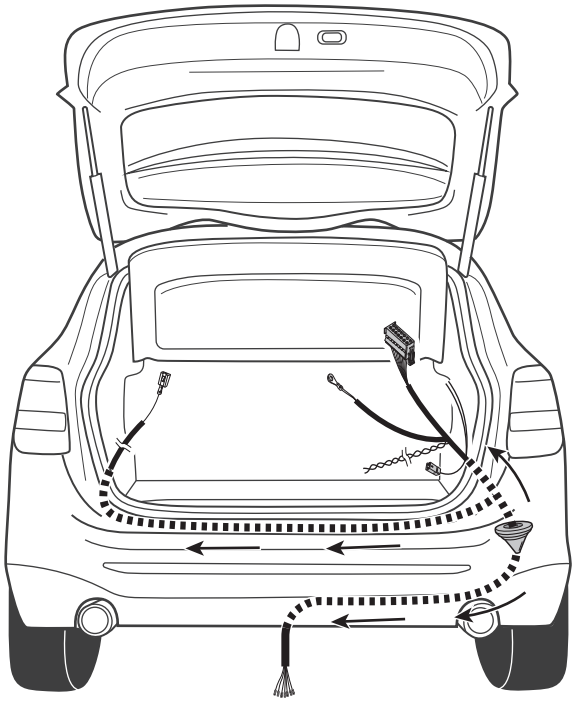

6

Option 1

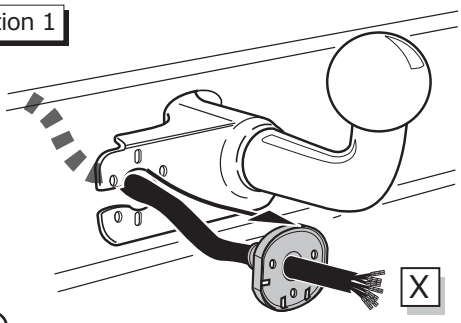


Option 2

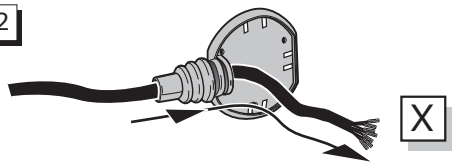


Option 3

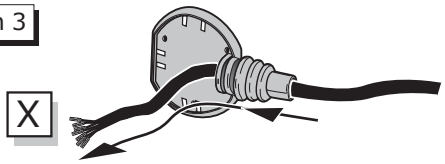


7

## SOCKET CONNECTION

| DIN/ISO 1724 | L | | 1-7 | R | | STOP | |
|---|---|---|---|---|---|---|---|
| | 1/L | 2 | 3/31 | 4/R | 5/58-R | 6/54 | 7/58-L |
| Pmax | 21W | 21W | | 21W | 42W | 3x21W | 42W |
| | Yellow | Blue | White | Green | Brown | Red | Black |

8

Option 1

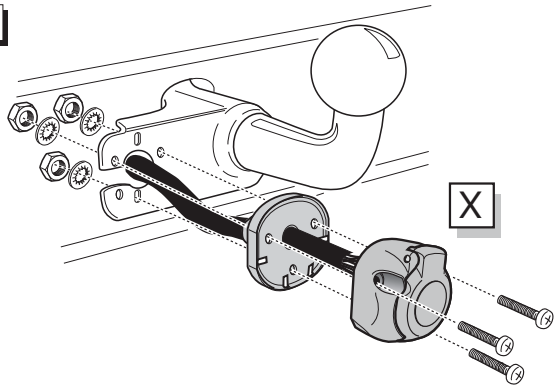


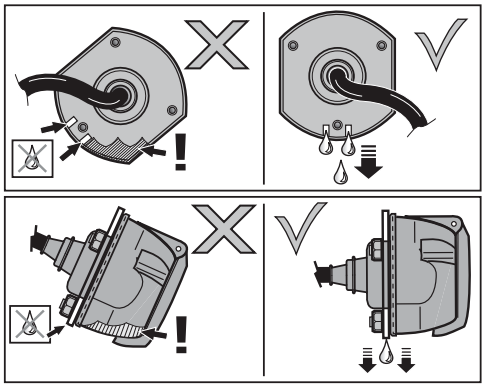


9



ECS Electronics UK
The Old Dyehouse
Macclesfield
Cheshire, SK11 7RN UK

SALE: +44 (0) 7980 847124
TECHNICAL: +44 (0) 7440 202052
WEB: www.ecs-electronicsuk.co.uk

Email-sales: n.lea@ecs-electronics.com
Email-technical: t.skinner@ecs-electronics.com

Revision: 2 / 17.01.2019
BW-027-07MU

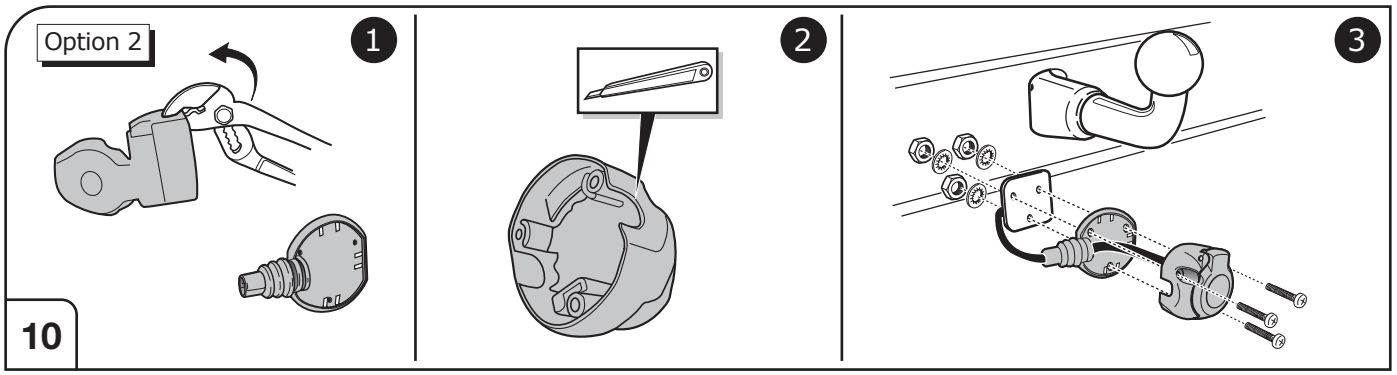


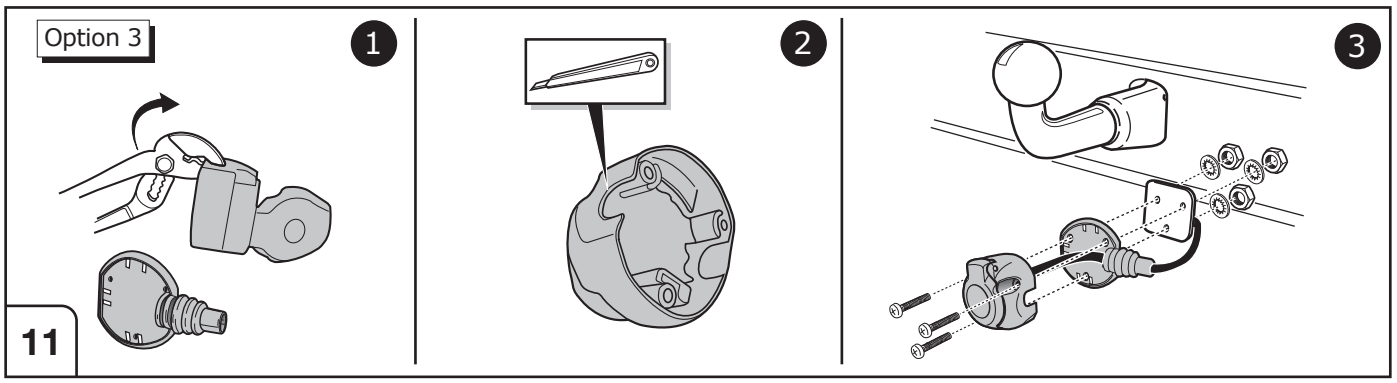


## BMW F45 / F46

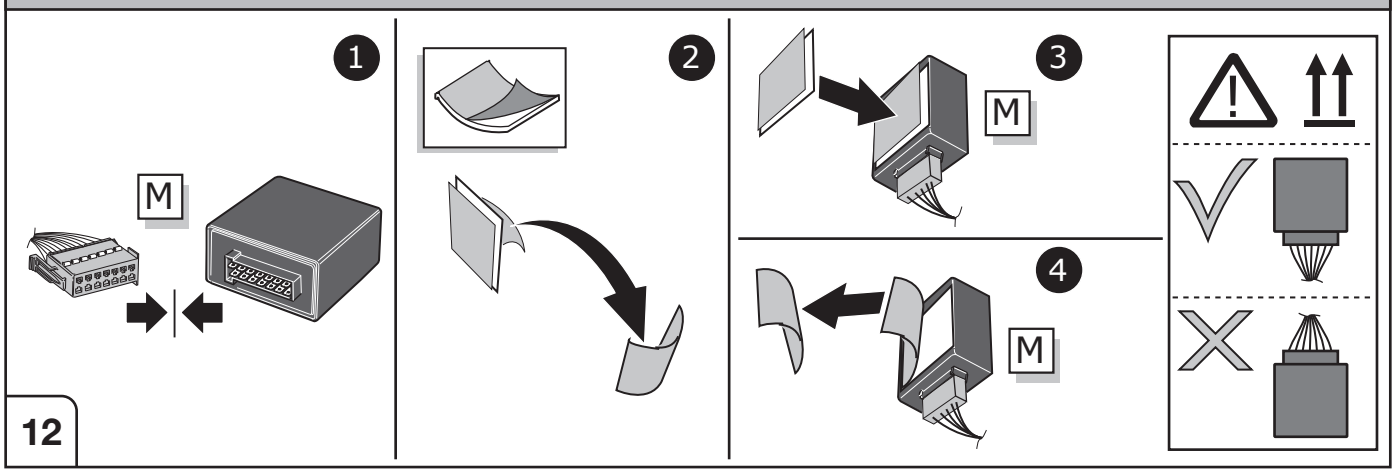


## BMW F45 / F46

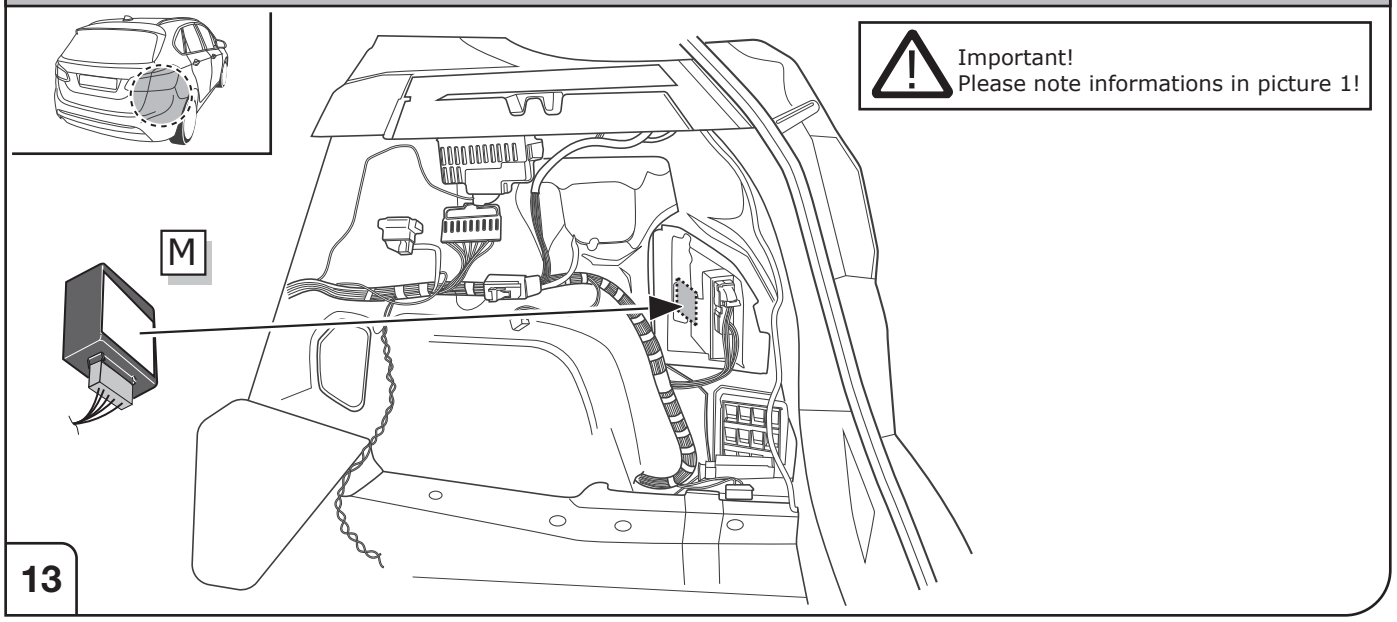




ECS Electronics UK
The Old Dyehouse
Macclesfield
Cheshire, SK11 7RN UK

SALE: +44 (0) 7980 847124
TECHNICAL: +44 (0) 7440 202052
WEB: www.ecs-electronicsuk.co.uk

Email-sales: n.lea@ecs-electronics.com
Email-technical: t.skinner@ecs-electronics.com

Revision: 2 / 17.01.2019
BW-027-07MU

## BMW F45 / F46

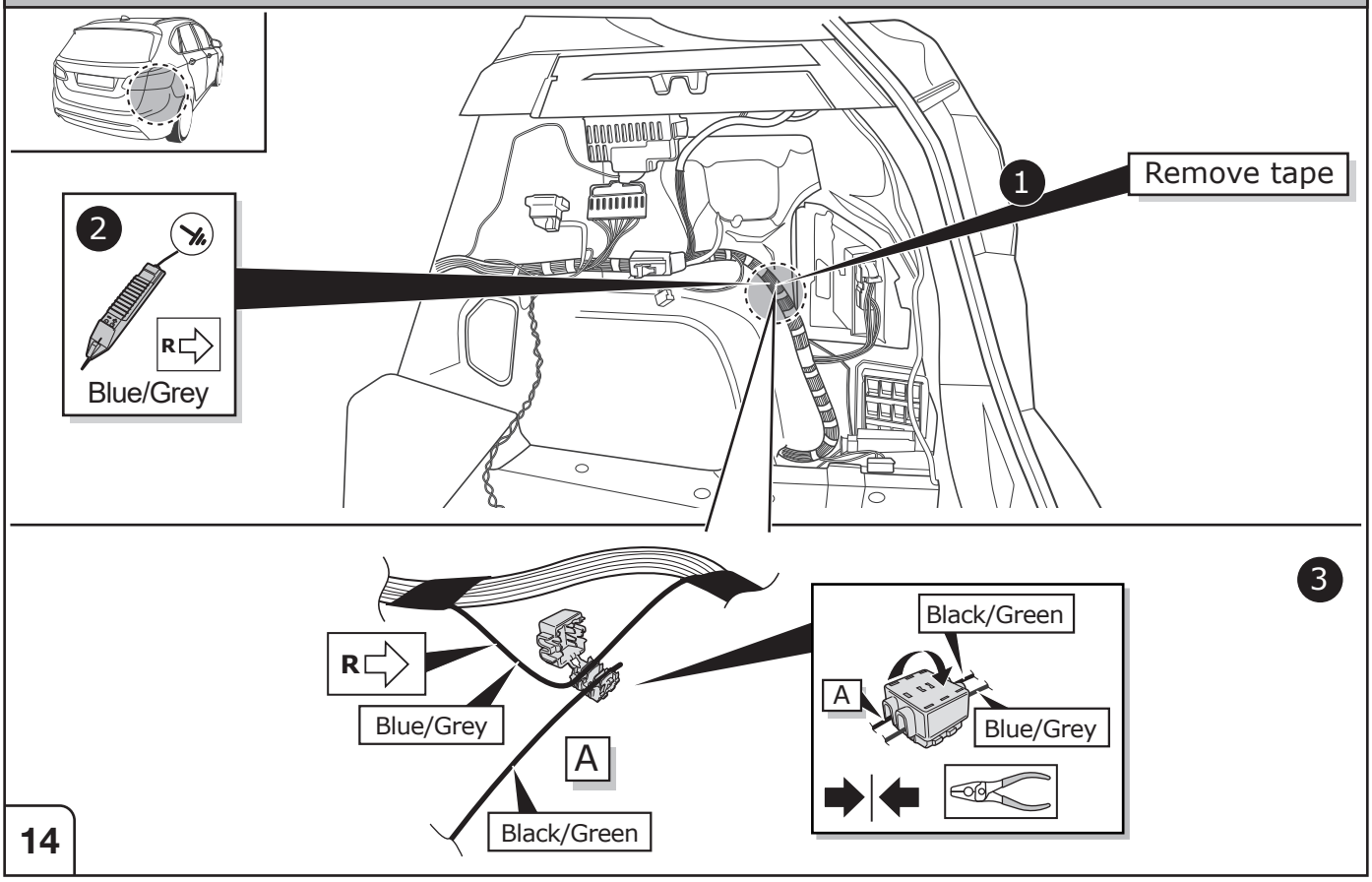


## BMW F45 / F46

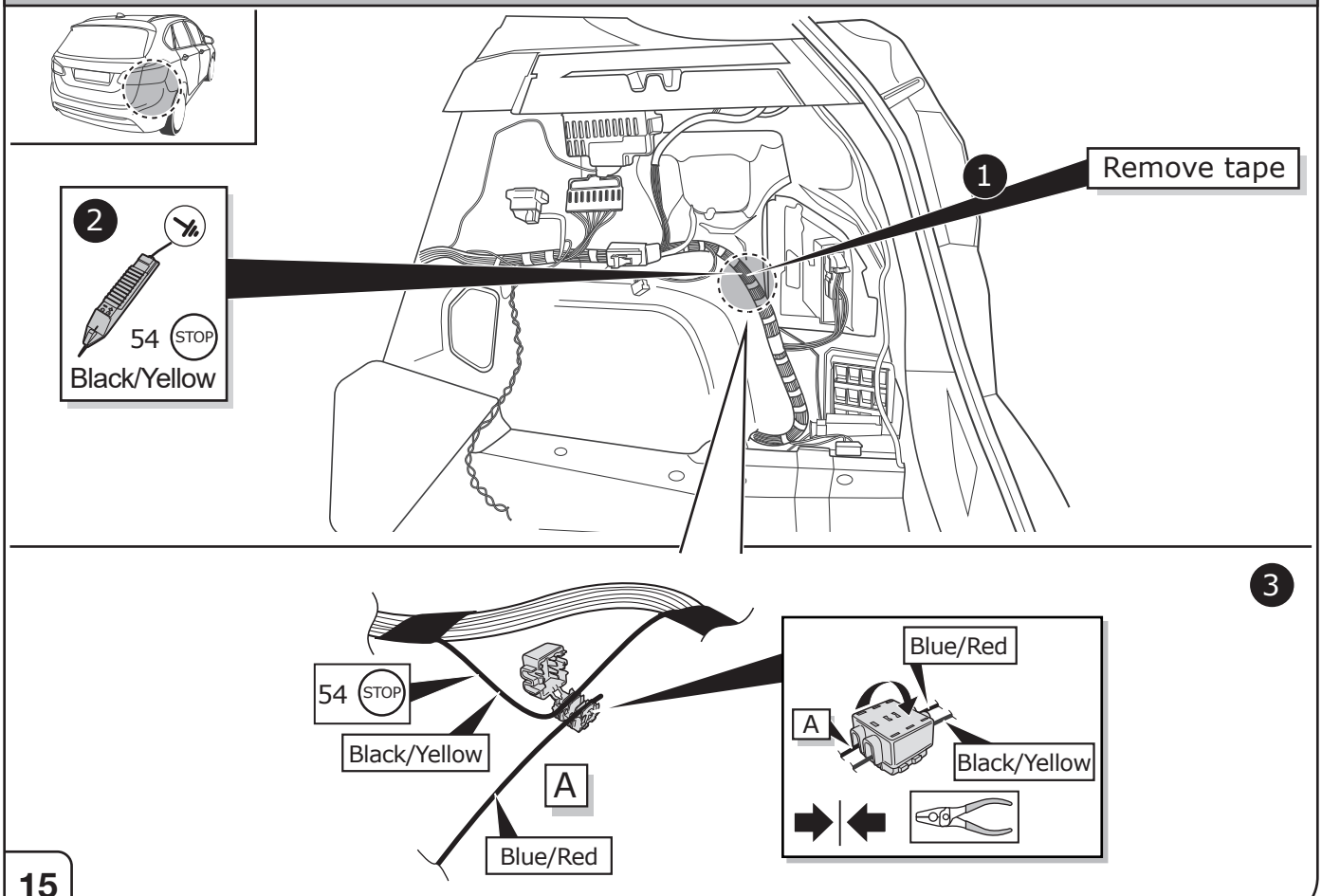




ECS Electronics UK
The Old Dyehouse
Macclesfield
Cheshire, SK11 7RN UK

SALE: +44 (0) 7980 847124
TECHNICAL: +44 (0) 7440 202052
WEB: www.ecs-electronicsuk.co.uk

Email-sales: n.lea@ecs-electronics.com
Email-technical: t.skinner@ecs-electronics.com

Revision: 2 / 17.01.2019
BW-027-07MU

## BMW F45 / F46

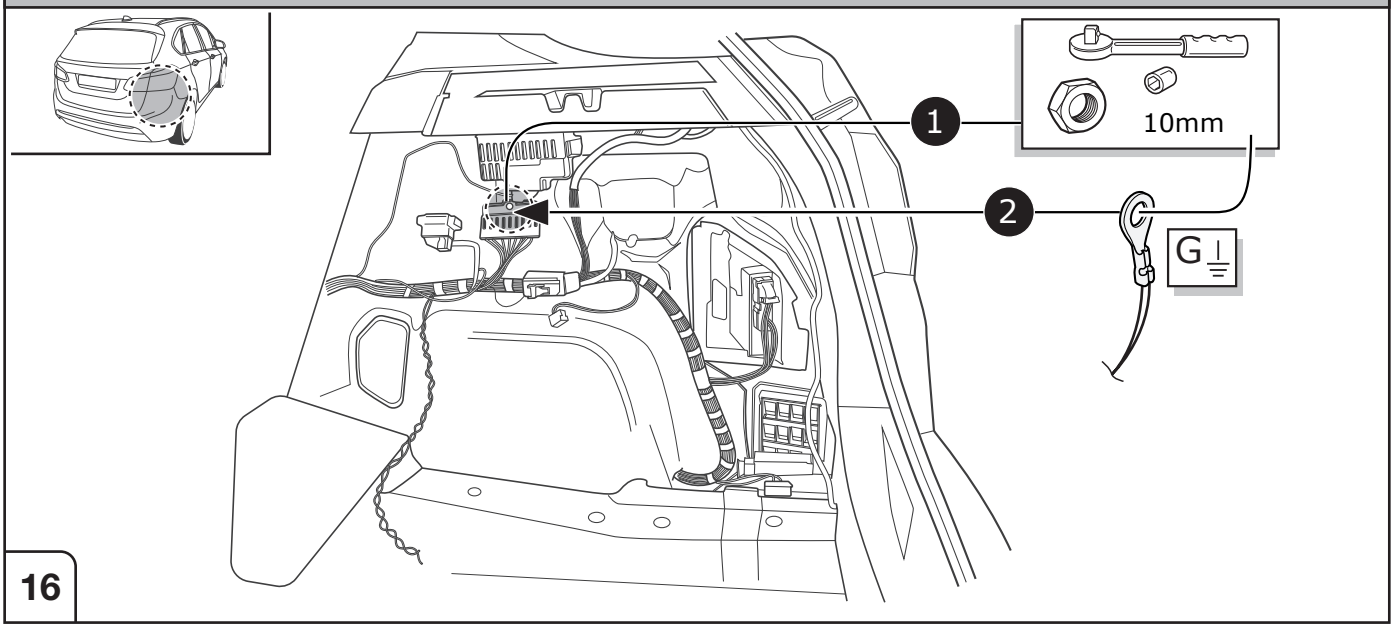


## BMW F48 / F39

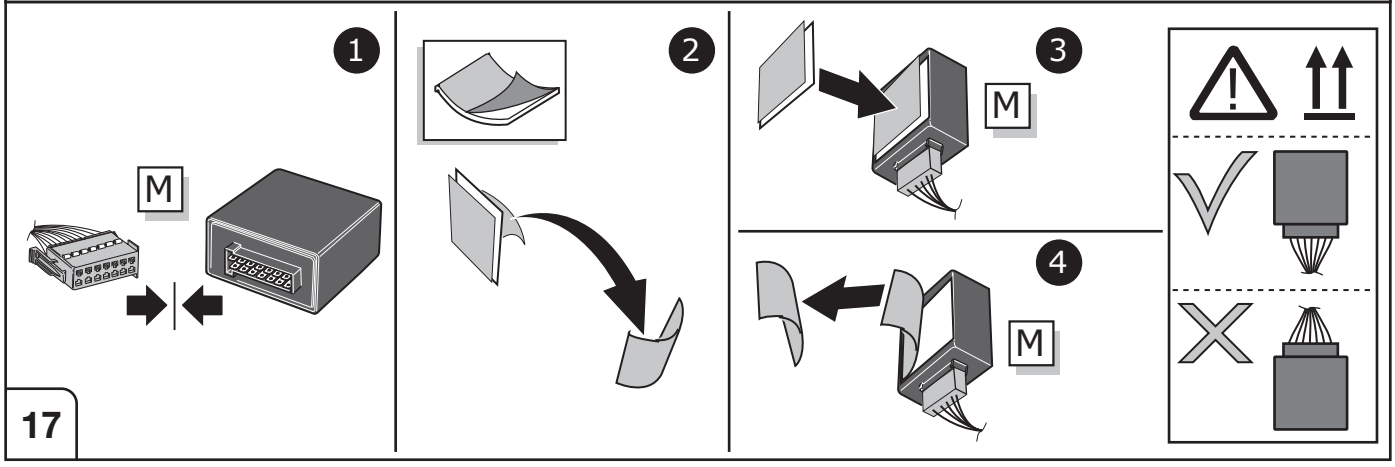


## BMW F48 / F39

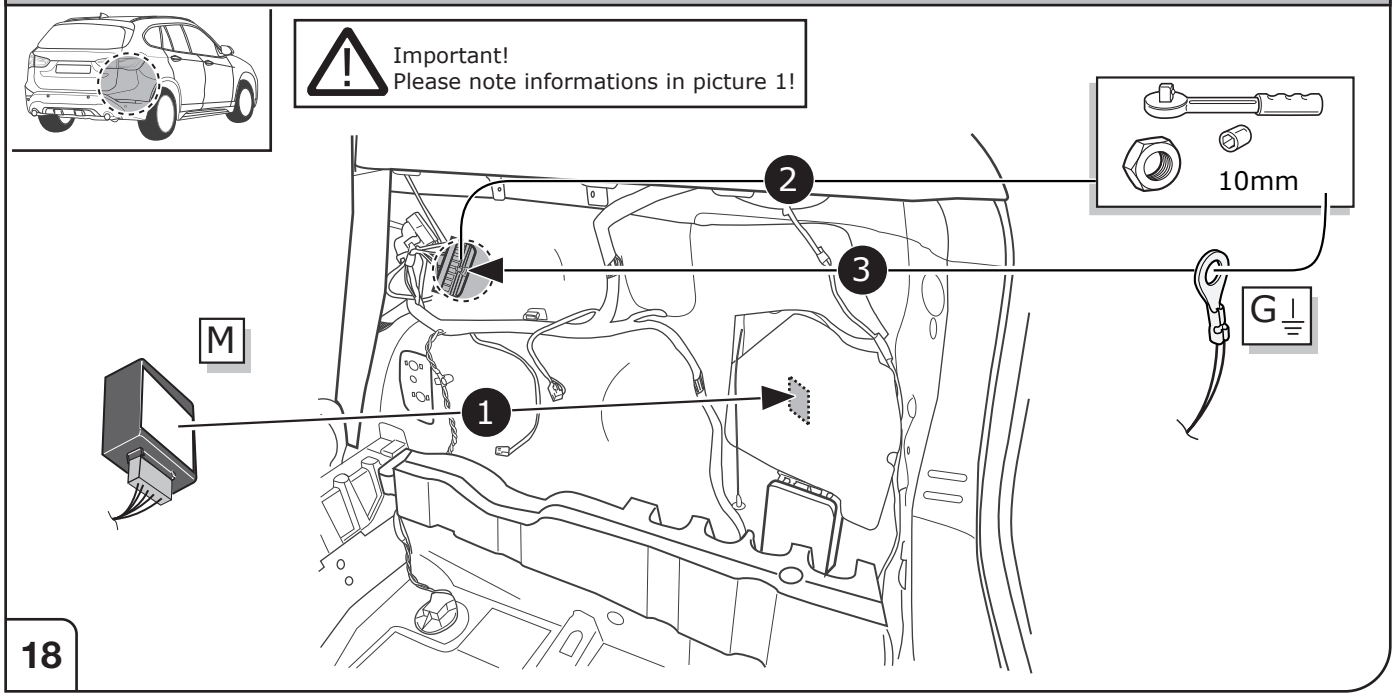




ECS Electronics UK
The Old Dyehouse
Macclesfield
Cheshire, SK11 7RN UK

SALE: +44 (0) 7980 847124
TECHNICAL: +44 (0) 7440 202052
WEB: www.ecs-electronicsuk.co.uk

Email-sales: n.lea@ecs-electronics.com
Email-technical: t.skinner@ecs-electronics.com

Revision: 2 / 17.01.2019
BW-027-07MU

## BMW F48 / F39

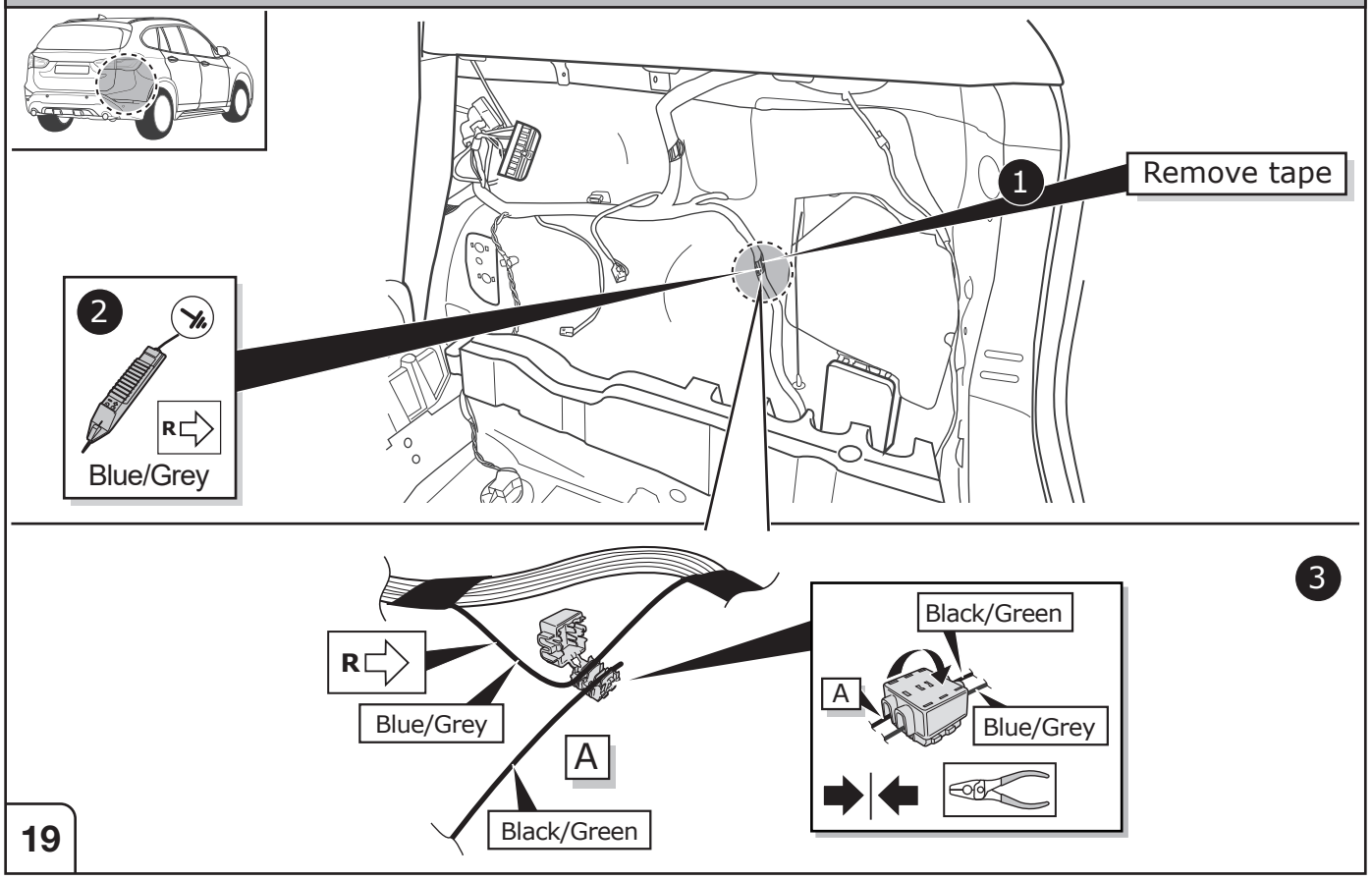


19

## BMW F48 / F39

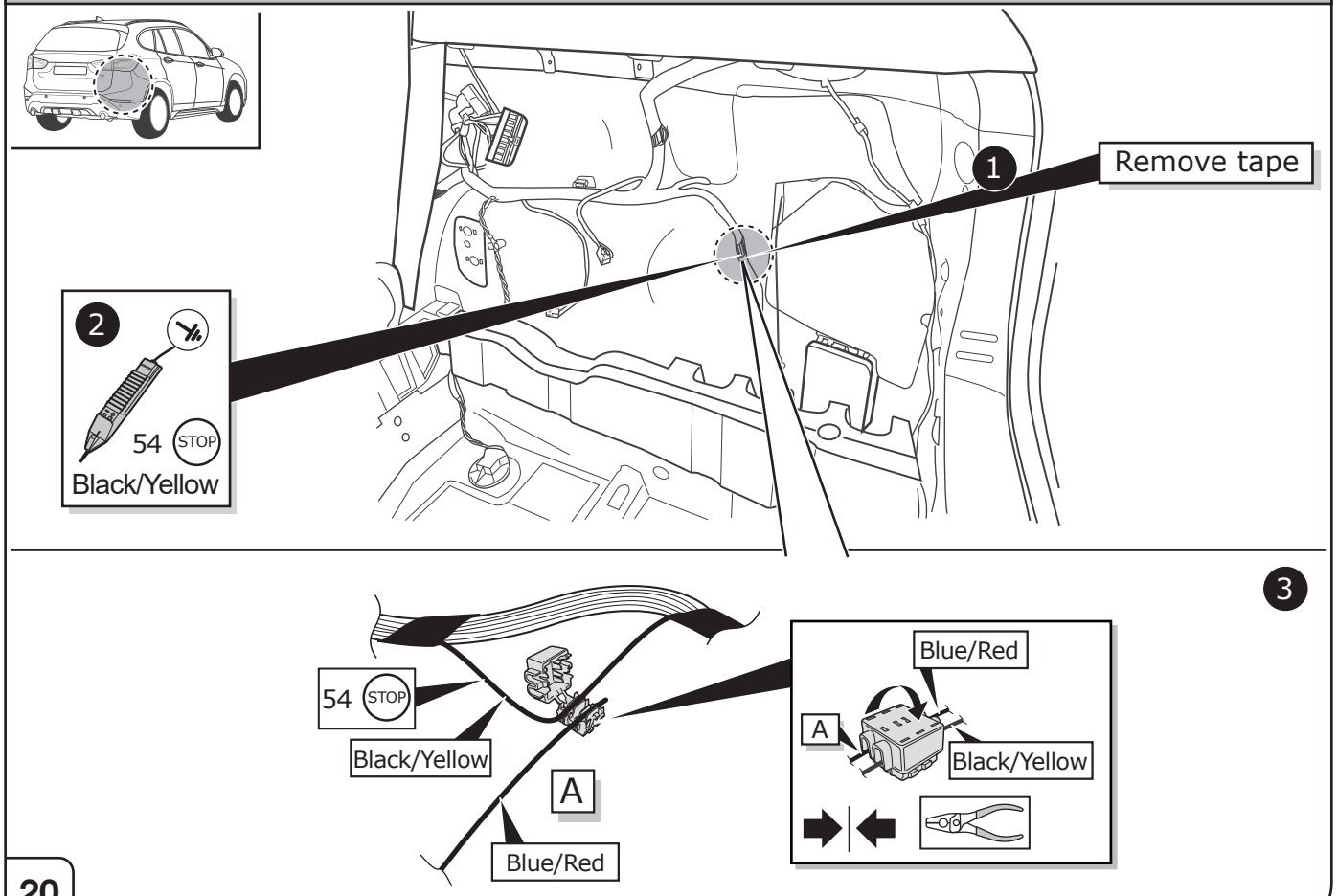


20



ECS Electronics UK
The Old Dyehouse
Macclesfield
Cheshire, SK11 7RN UK

SALE: +44 (0) 7980 847124
TECHNICAL: +44 (0) 7440 202052
WEB: www.ecs-electronicsuk.co.uk

Email-sales: n.lea@ecs-electronics.com
Email-technical: t.skinner@ecs-electronics.com

Revision: 2 / 17.01.2019
BW-027-07MU

## BMW F45 / F46

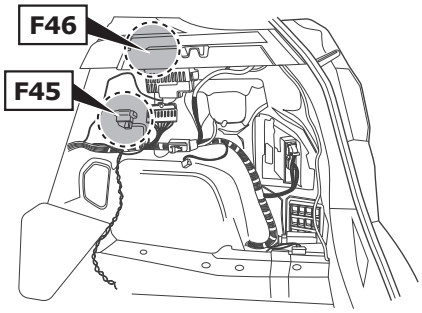


## BMW F48 / F39

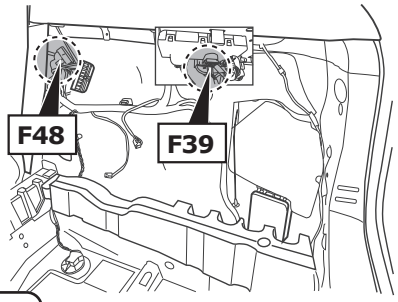


**CAN-Data Wire**

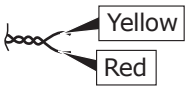


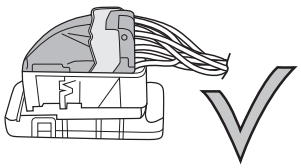

**Option 1**

22 – 29

36 – 51

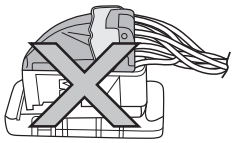

**Option 2**

30 – 51

Important!
Please note informations in picture 1!

21

**Option 1**

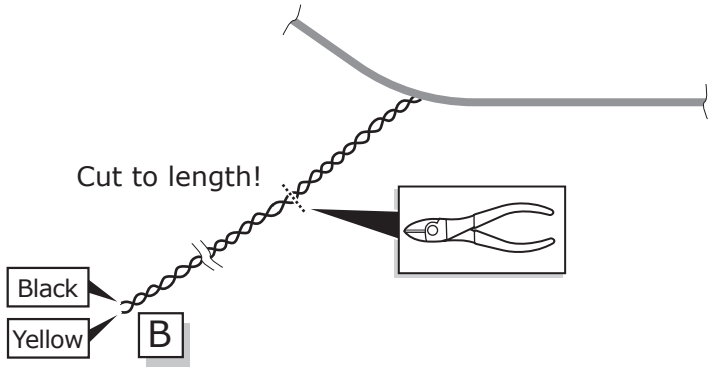


22

**Option 1**

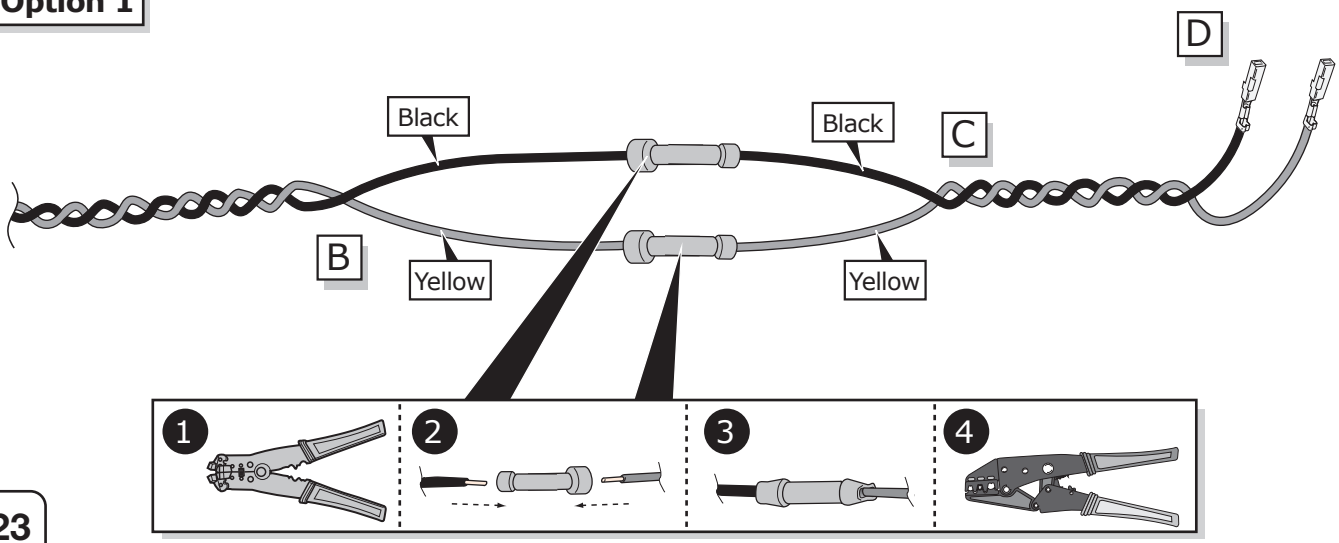


23



ECS Electronics UK
The Old Dyehouse
Macclesfield
Cheshire, SK11 7RN UK

SALE: +44 (0) 7980 847124
TECHNICAL: +44 (0) 7440 202052
WEB: www.ecs-electronicsuk.co.uk

Email-sales: n.lea@ecs-electronics.com
Email-technical: t.skinner@ecs-electronics.com

Revision: 2 / 17.01.2019
BW-027-07MU

## BMW F45 / F46

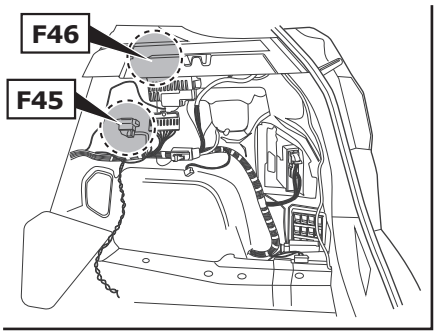


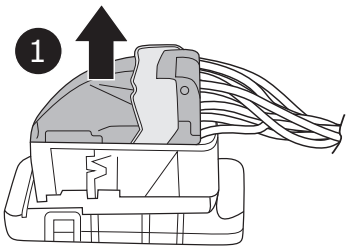


**CAN-Data Wire**

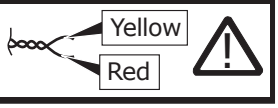


Important!
Please note informations in picture 1!

**Option 1**

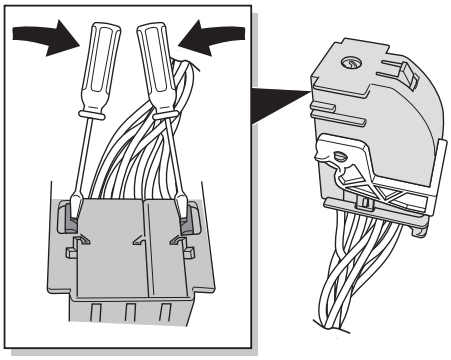


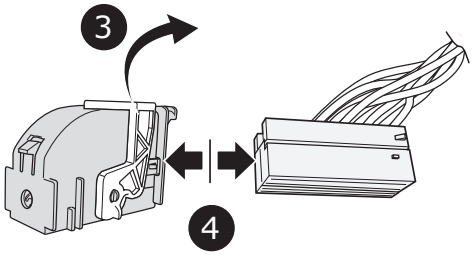


24

## BMW F45 / F46

**Option 1**

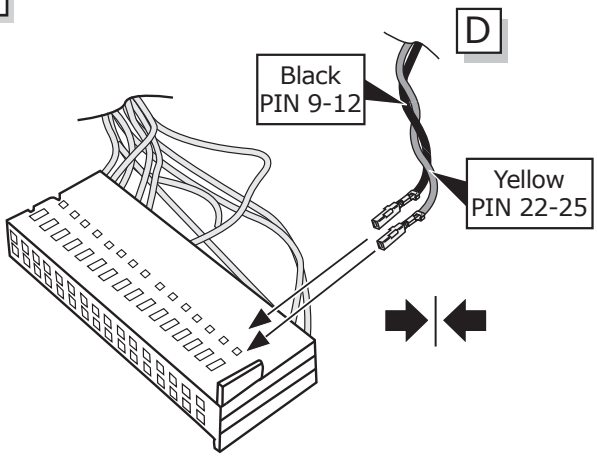


**CAN-Data Wire**

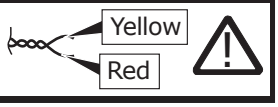


Important!
Please note informations in picture 1!

25

## BMW F45 / F46

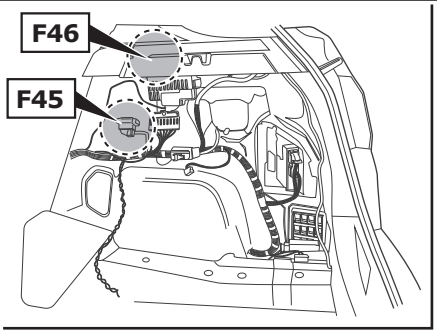


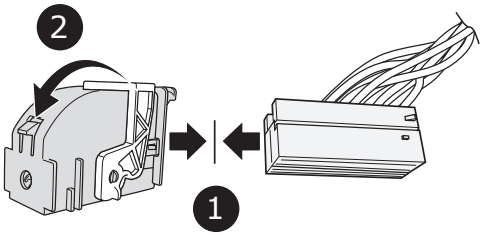


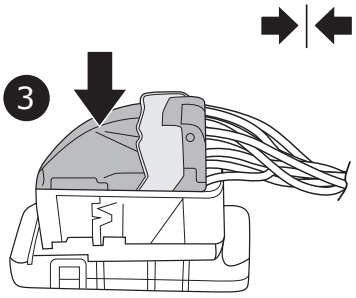


**Option 1**

26



ECS Electronics UK
The Old Dyehouse
Macclesfield
Cheshire, SK11 7RN UK

SALE: +44 (0) 7980 847124
TECHNICAL: +44 (0) 7440 202052
WEB: www.ecs-electronicsuk.co.uk

Email-sales: n.lea@ecs-electronics.com
Email-technical: t.skinner@ecs-electronics.com

Revision: 2 / 17.01.2019
BW-027-07MU

## BMW F48 / F39

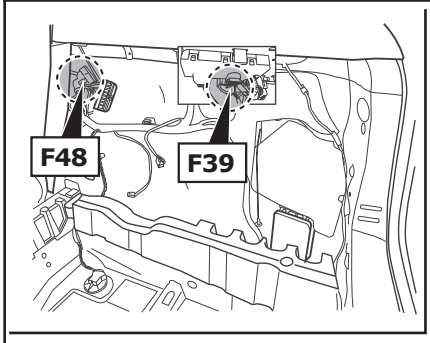


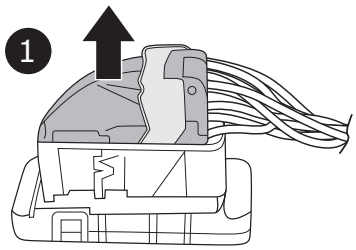


**CAN-Data Wire** Yellow / Red

Important!
Please note informations in picture 1!

**Option 1**

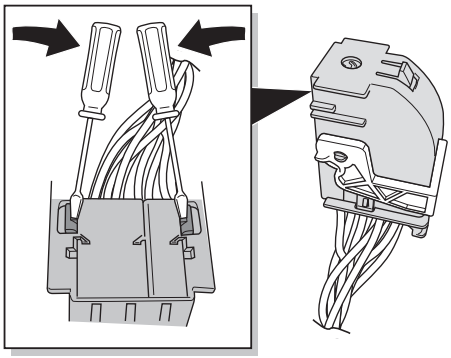


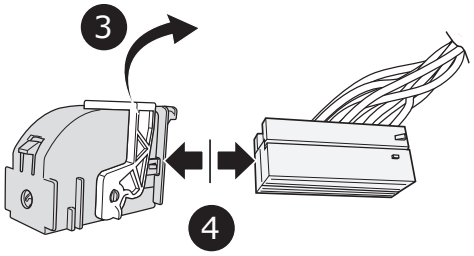


27

## BMW F48 / F39

**Option 1**

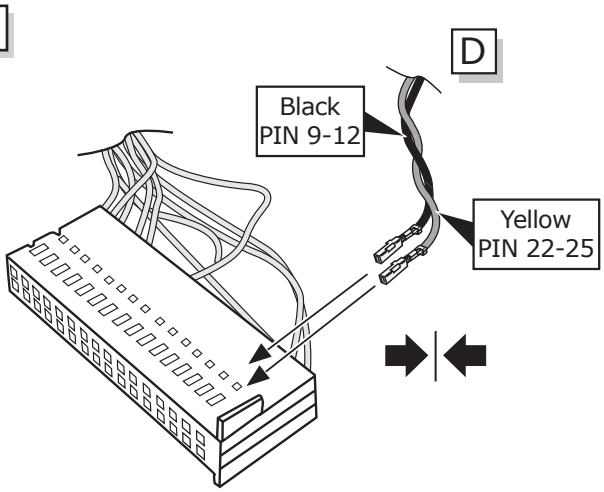


**CAN-Data Wire** Yellow / Red

Important!
Please note informations in picture 1!

28

## BMW F48 / F39

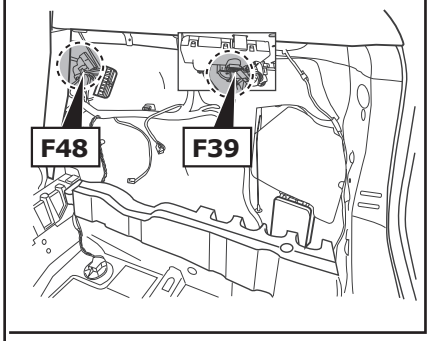


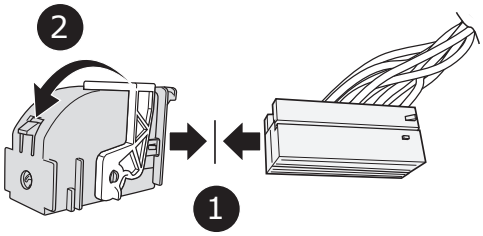


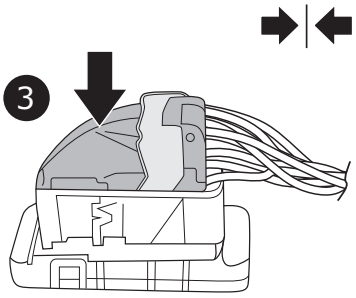


**Option 1**

29



ECS Electronics UK
The Old Dyehouse
Macclesfield
Cheshire, SK11 7RN UK

SALE: +44 (0) 7980 847124
TECHNICAL: +44 (0) 7440 202052
WEB: www.ecs-electronicsuk.co.uk

Email-sales: n.lea@ecs-electronics.com
Email-technical: t.skinner@ecs-electronics.com

Revision: 2 / 17.01.2019
BW-027-07MU

## Option 2

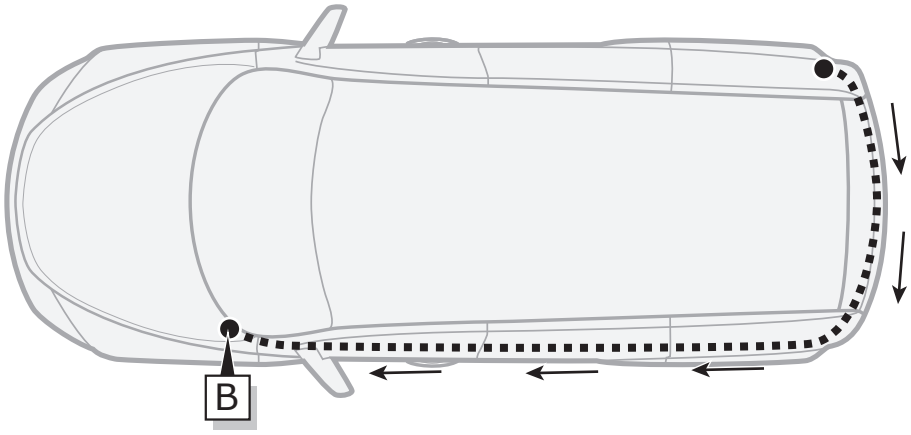


30

## Option 2

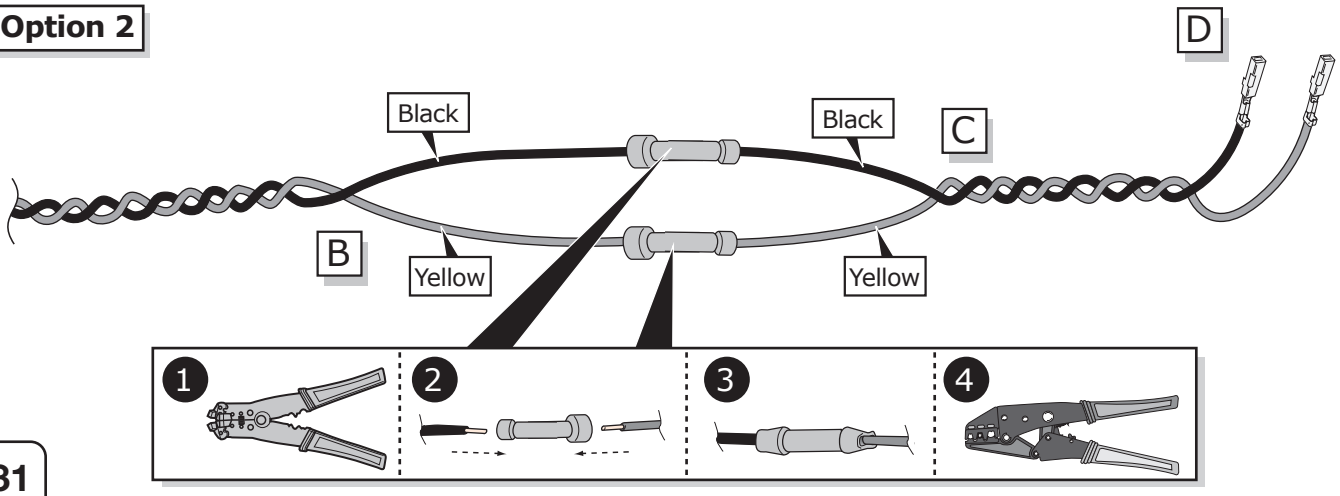


31

## Option 2

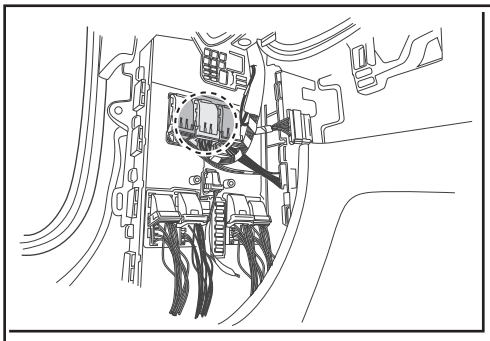

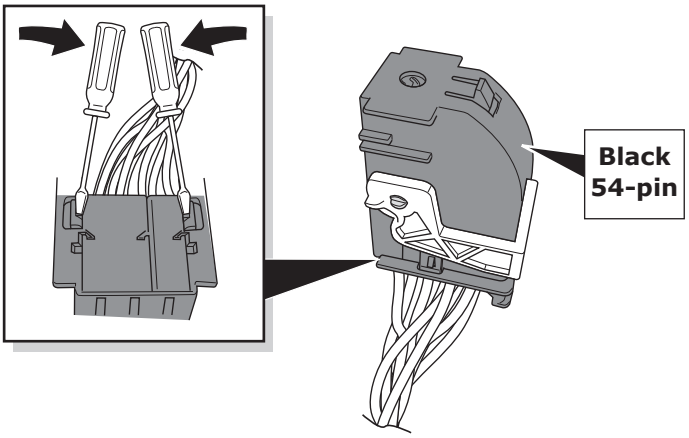


**CAN-Data Wire**

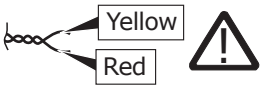


Important!
Please note informations in picture 1!

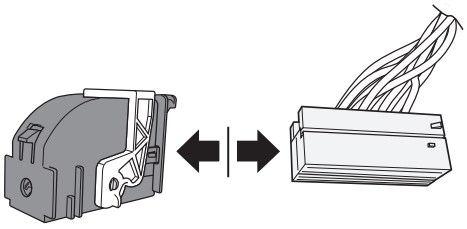


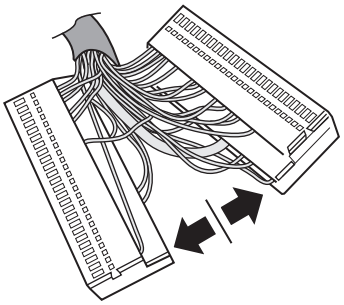


32



ECS Electronics UK
The Old Dyehouse
Macclesfield
Cheshire, SK11 7RN UK

SALE: +44 (0) 7980 847124
TECHNICAL: +44 (0) 7440 202052
WEB: www.ecs-electronicsuk.co.uk

Email-sales: n.lea@ecs-electronics.com
Email-technical: t.skinner@ecs-electronics.com

Revision: 2 / 17.01.2019
BW-027-07MU

## Option 2a

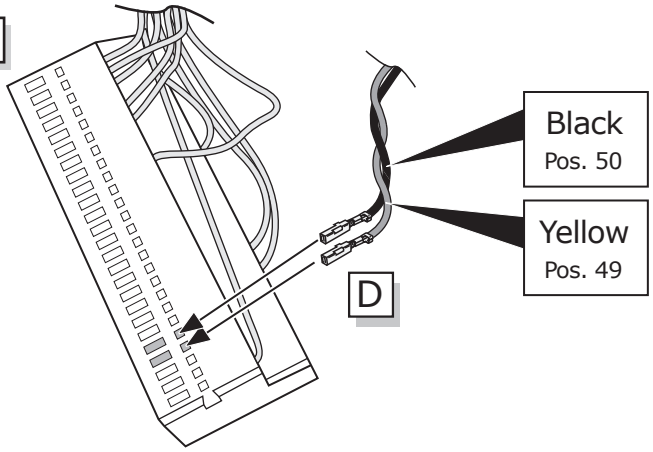


**CAN-Data Wire**

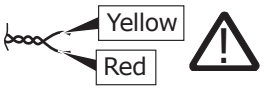


Important!
Please note informations in picture 1!

33

## Option 2a

1

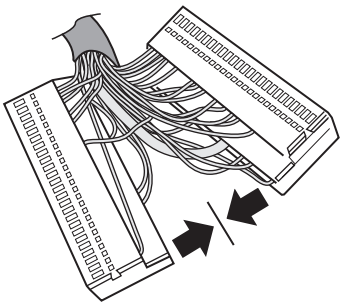

2

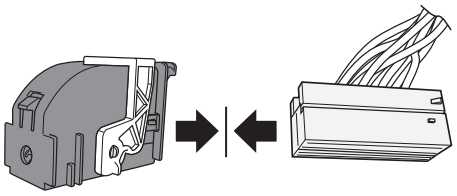

34

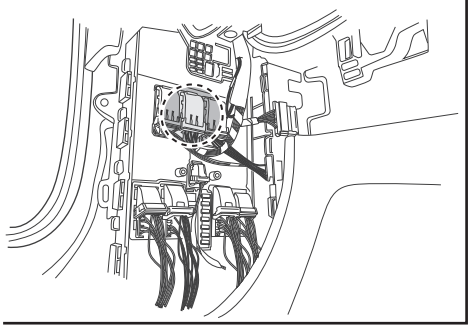

1

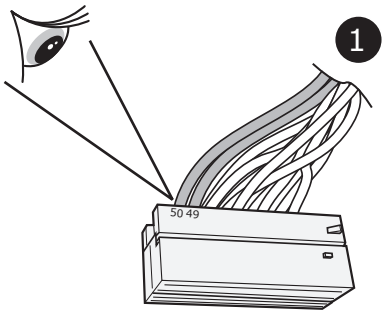


2

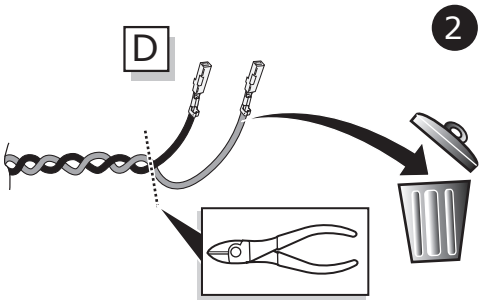


## Option 2b

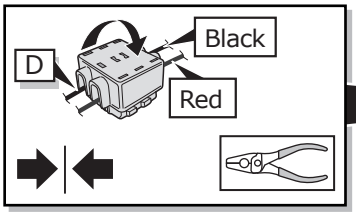


3

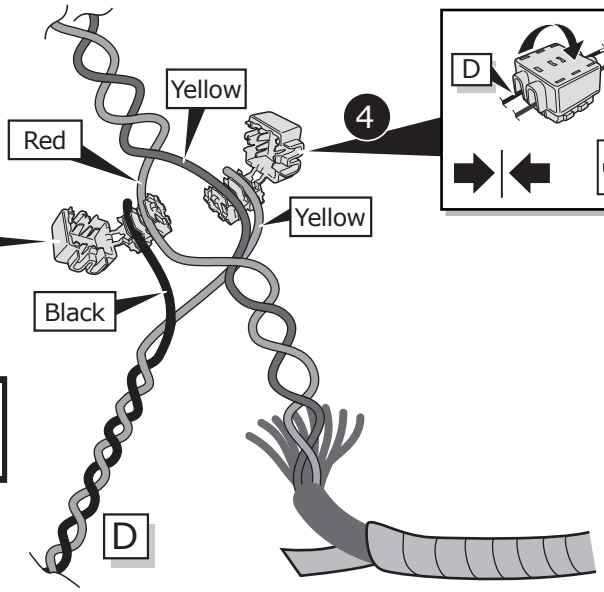


4

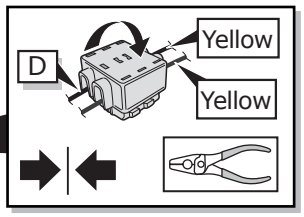


**CAN-Data Wire**

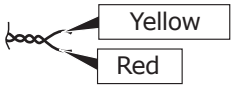


Important!
Please note informations in picture 1!

35



ECS Electronics UK
The Old Dyehouse
Macclesfield
Cheshire, SK11 7RN UK

SALE: +44 (0) 7980 847124
TECHNICAL: +44 (0) 7440 202052
WEB: www.ecs-electronicsuk.co.uk

Email-sales: n.lea@ecs-electronics.com
Email-technical: t.skinner@ecs-electronics.com

Revision: 2 / 17.01.2019
BW-027-07MU

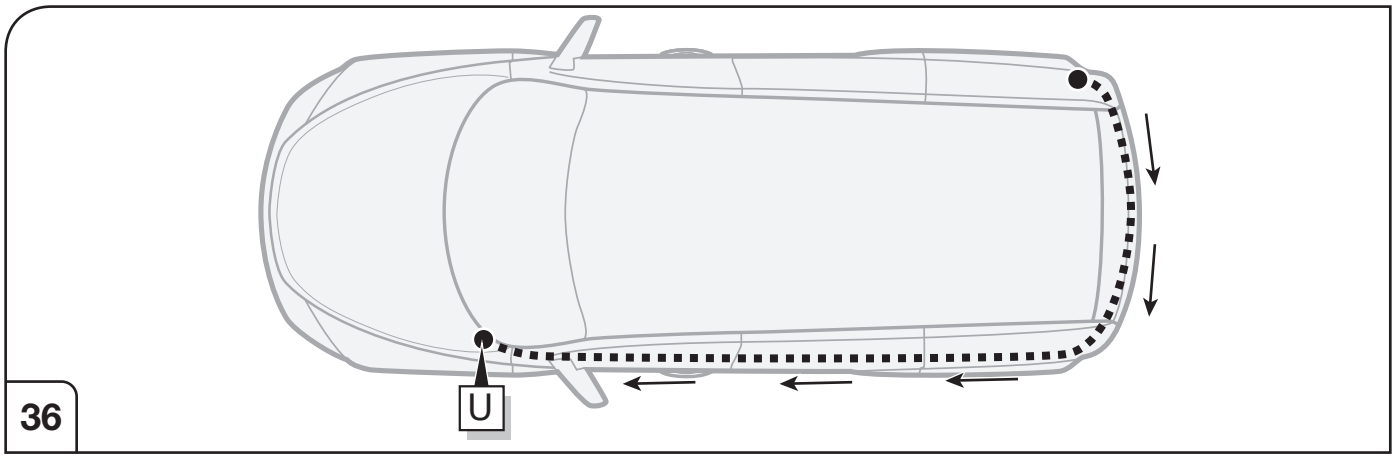


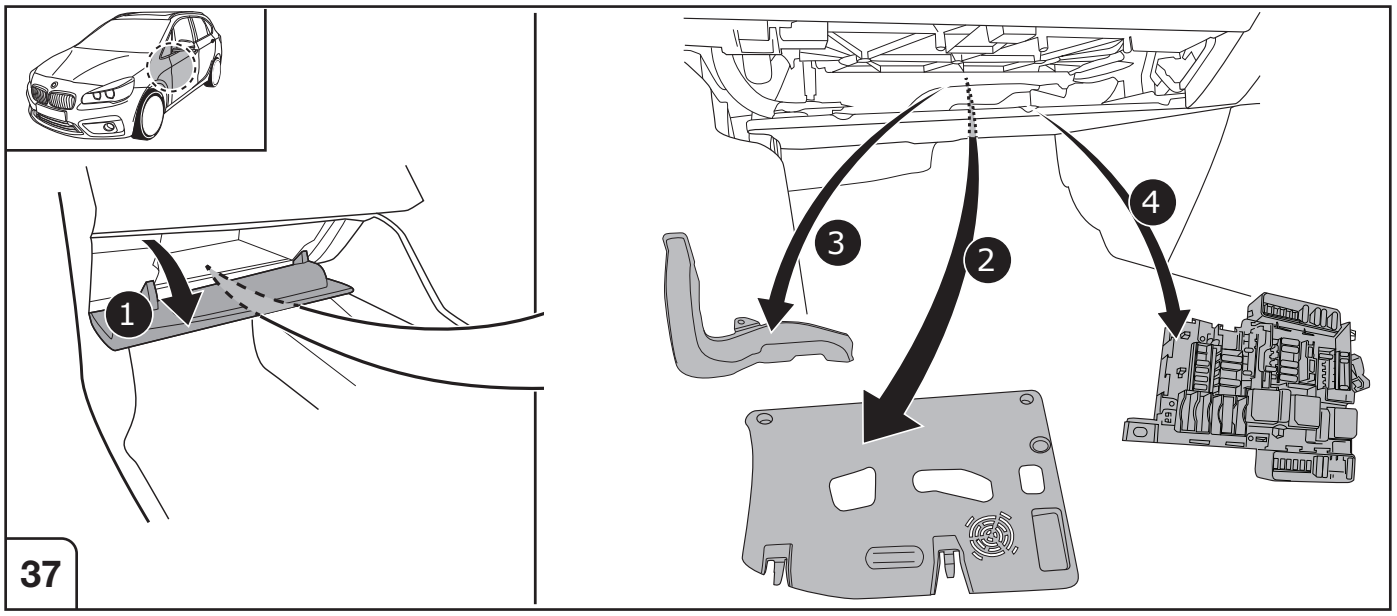


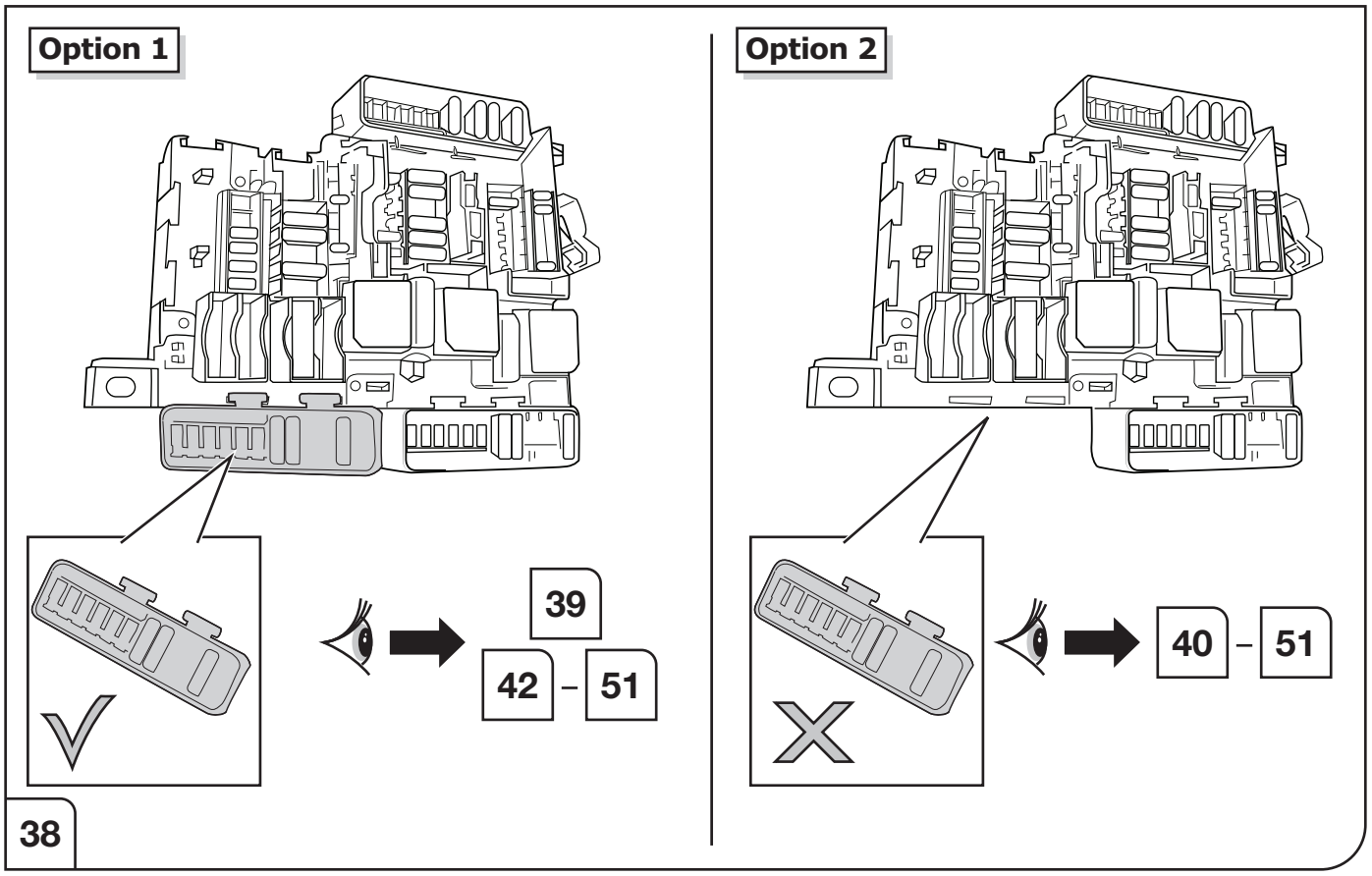




ECS Electronics UK
The Old Dyehouse
Macclesfield
Cheshire, SK11 7RN UK

SALE: +44 (0) 7980 847124
TECHNICAL: +44 (0) 7440 202052
WEB: www.ecs-electronicsuk.co.uk

Email-sales: n.lea@ecs-electronics.com
Email-technical: t.skinner@ecs-electronics.com

Revision: 2 / 17.01.2019
BW-027-07MU

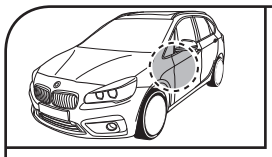

1

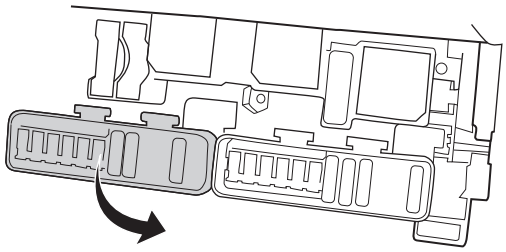

2

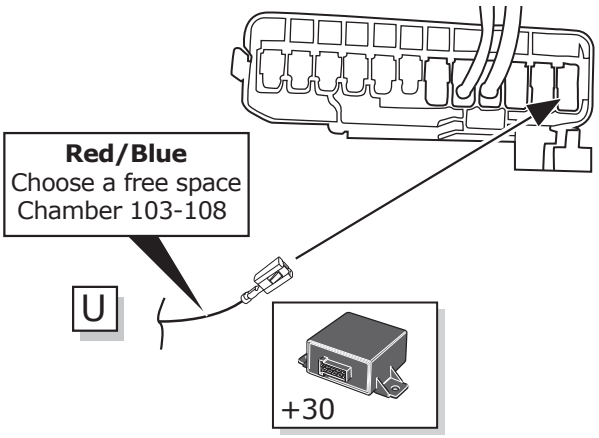


3

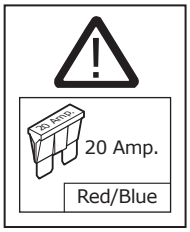


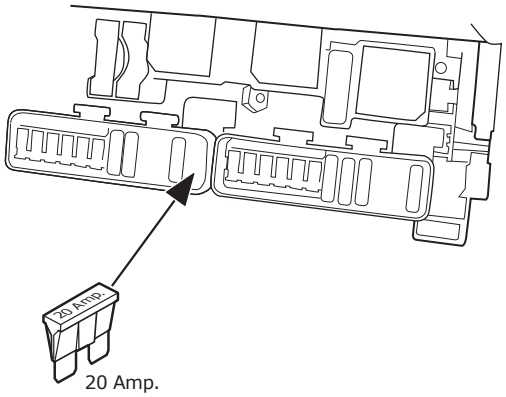


39

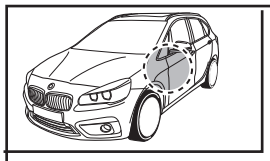

**Option 2**

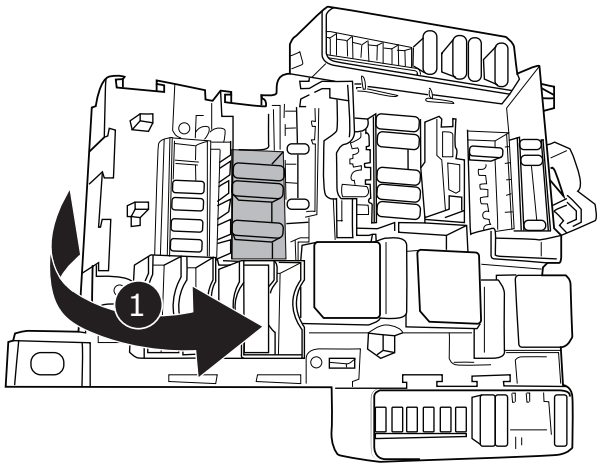


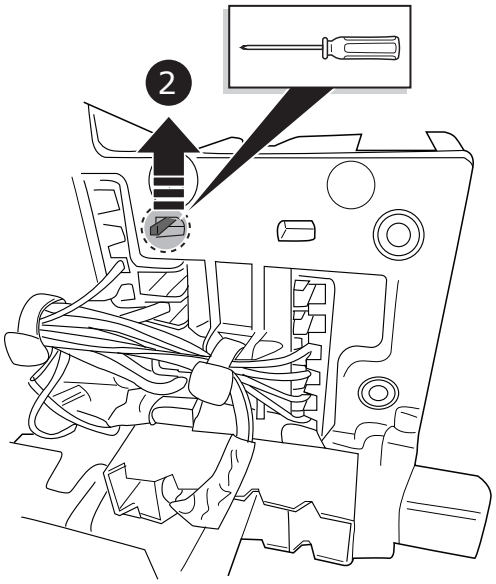


40



ECS Electronics UK
The Old Dyehouse
Macclesfield
Cheshire, SK11 7RN UK

SALE: +44 (0) 7980 847124
TECHNICAL: +44 (0) 7440 202052
WEB: www.ecs-electronicsuk.co.uk

Email-sales: n.lea@ecs-electronics.com
Email-technical: t.skinner@ecs-electronics.com

Revision: 2 / 17.01.2019
BW-027-07MU

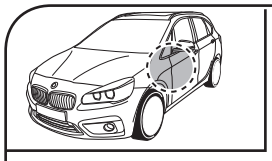

**Option 2**

1

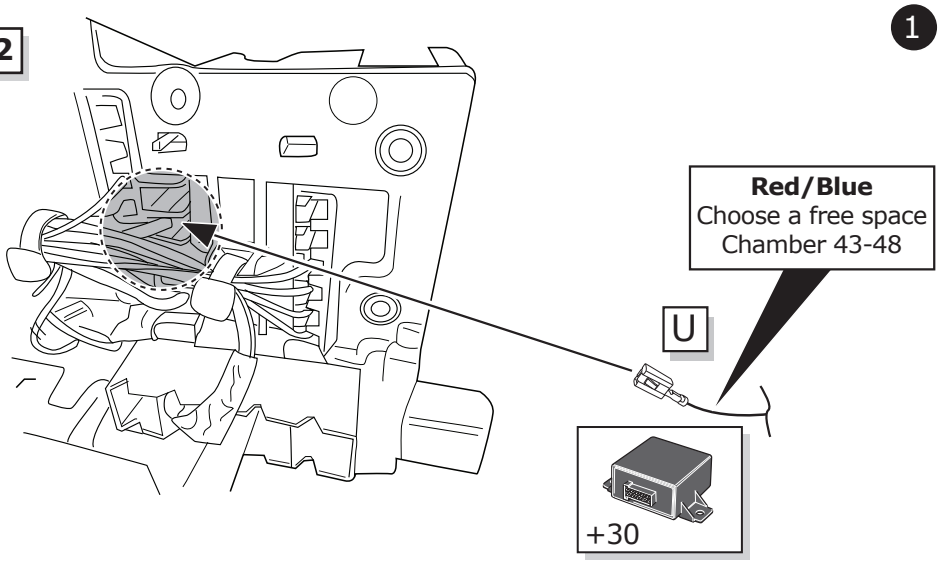


2

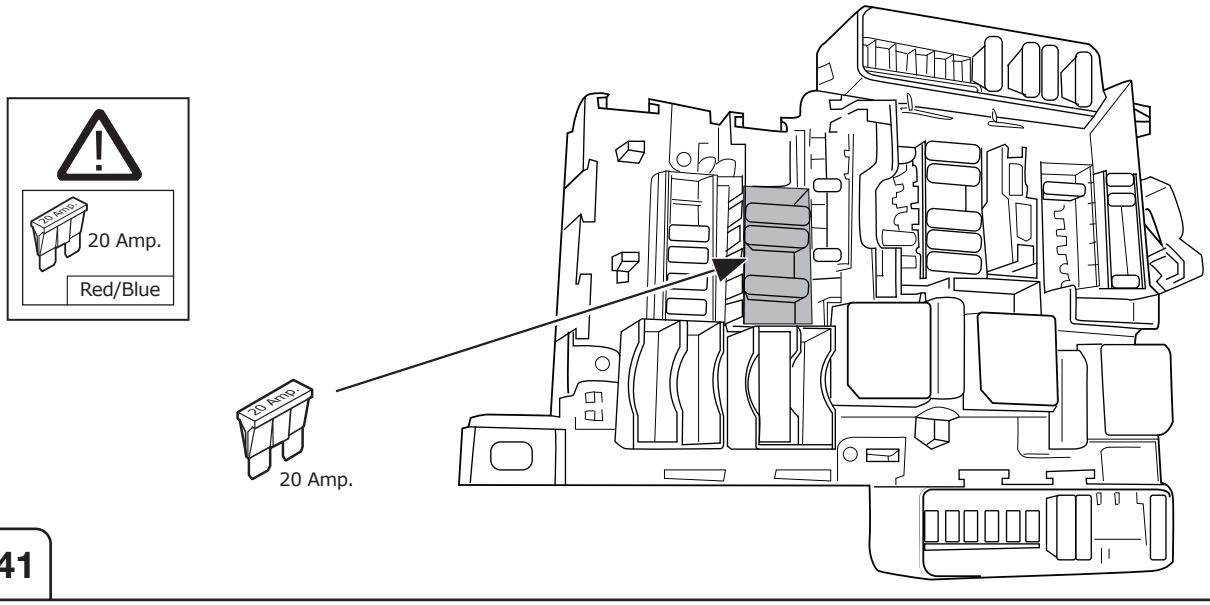


41

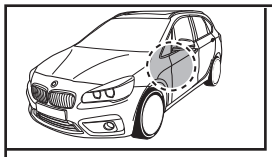

Please note the new fuse position !!

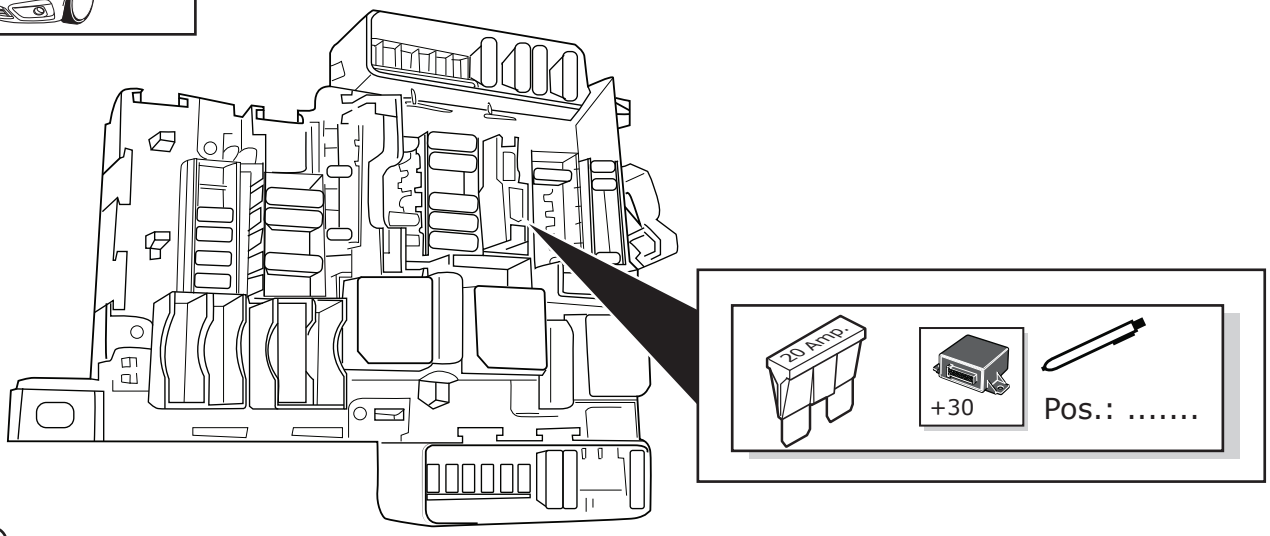


42



ECS Electronics UK
The Old Dyehouse
Macclesfield
Cheshire, SK11 7RN UK

SALE: +44 (0) 7980 847124
TECHNICAL: +44 (0) 7440 202052
WEB: www.ecs-electronicsuk.co.uk

Email-sales: n.lea@ecs-electronics.com
Email-technical: t.skinner@ecs-electronics.com

Revision: 2 / 17.01.2019
BW-027-07MU

**Optional**

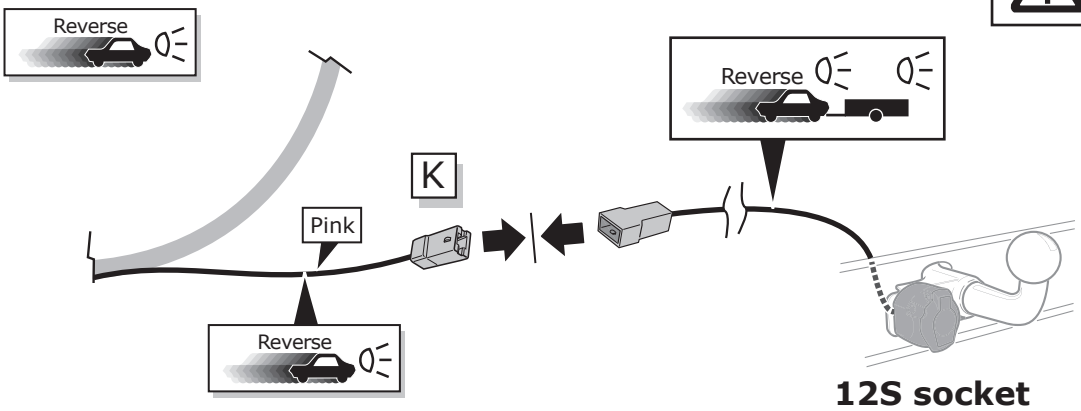


MAX = 21W

43

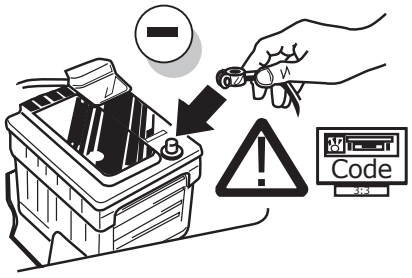


44

**Optional**

**Consult your supplier.**

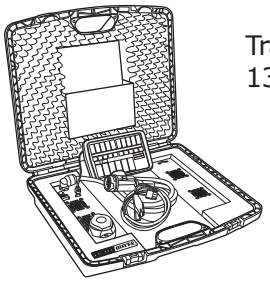

Trailer Simulator for 7- and 13-pin Sockets

45

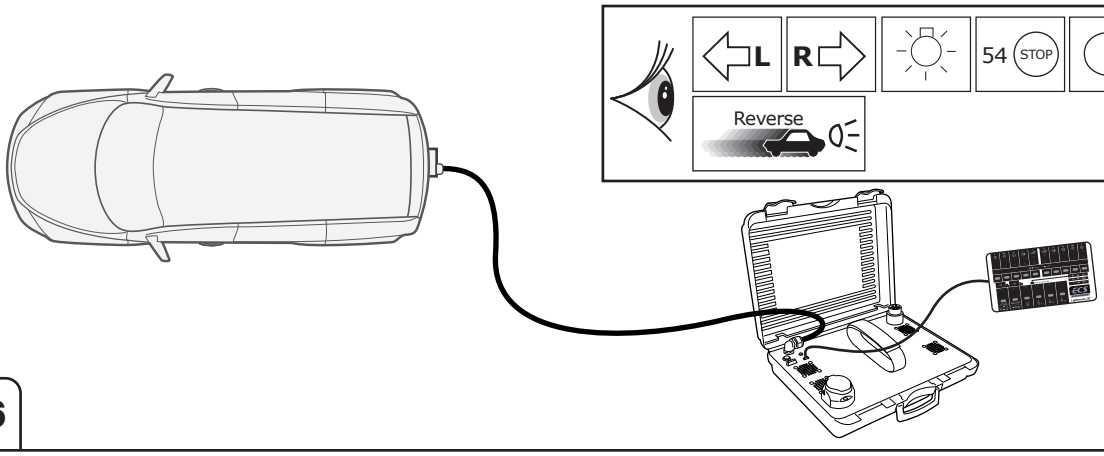


46



ECS Electronics UK
The Old Dyehouse
Macclesfield
Cheshire, SK11 7RN UK

SALE: +44 (0) 7980 847124
TECHNICAL: +44 (0) 7440 202052
WEB: www.ecs-electronicsuk.co.uk

Email-sales: n.lea@ecs-electronics.com
Email-technical: t.skinner@ecs-electronics.com

Revision: 2 / 17.01.2019
BW-027-07MU

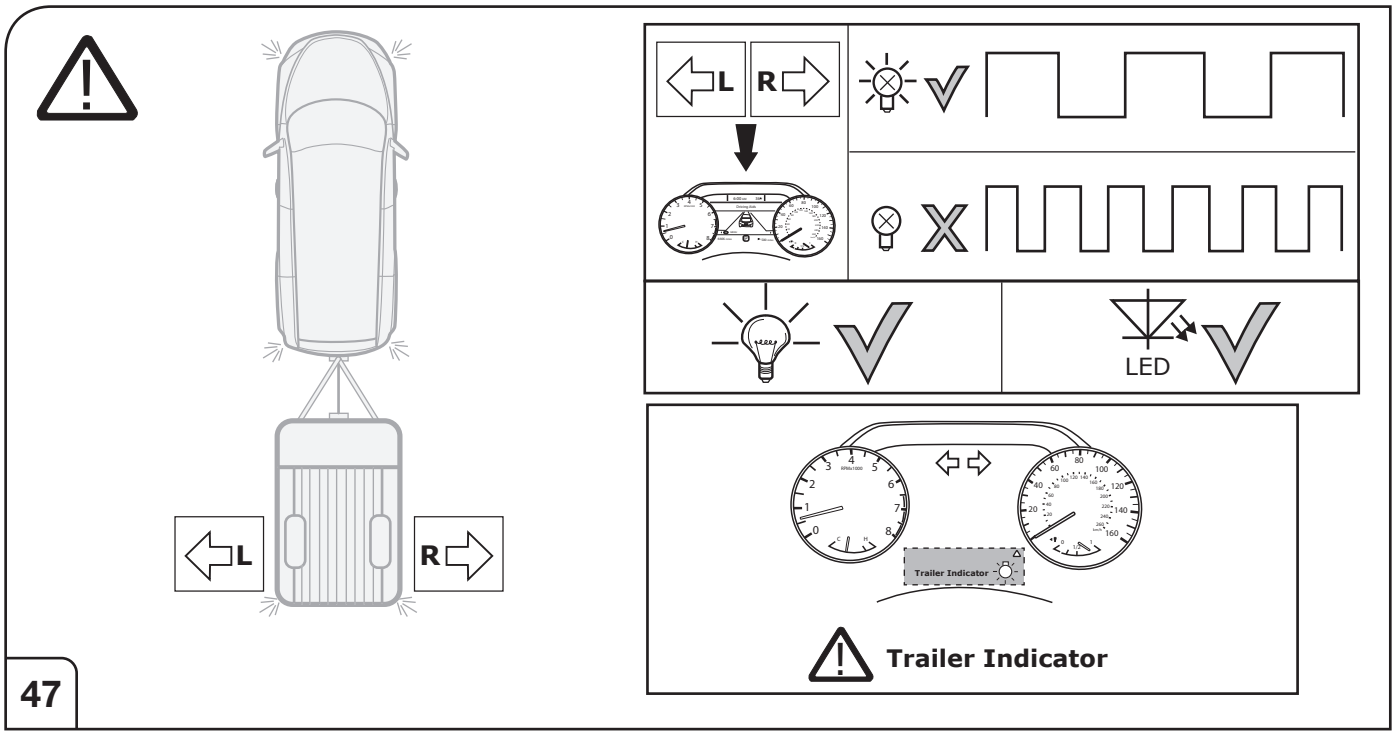


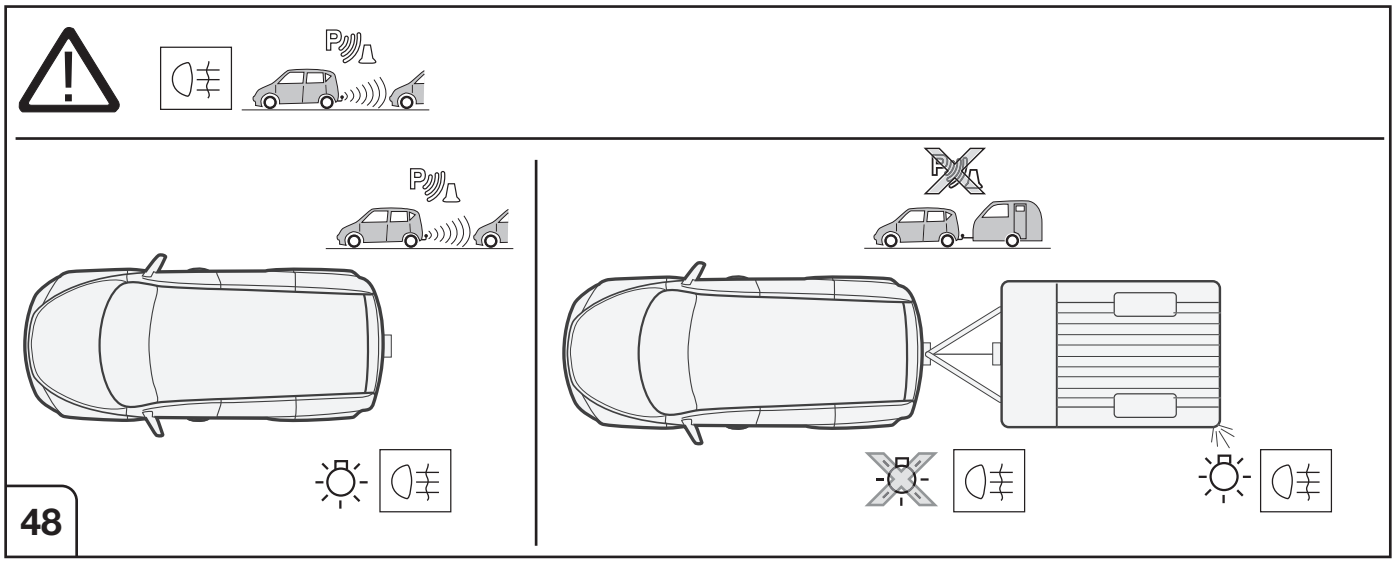


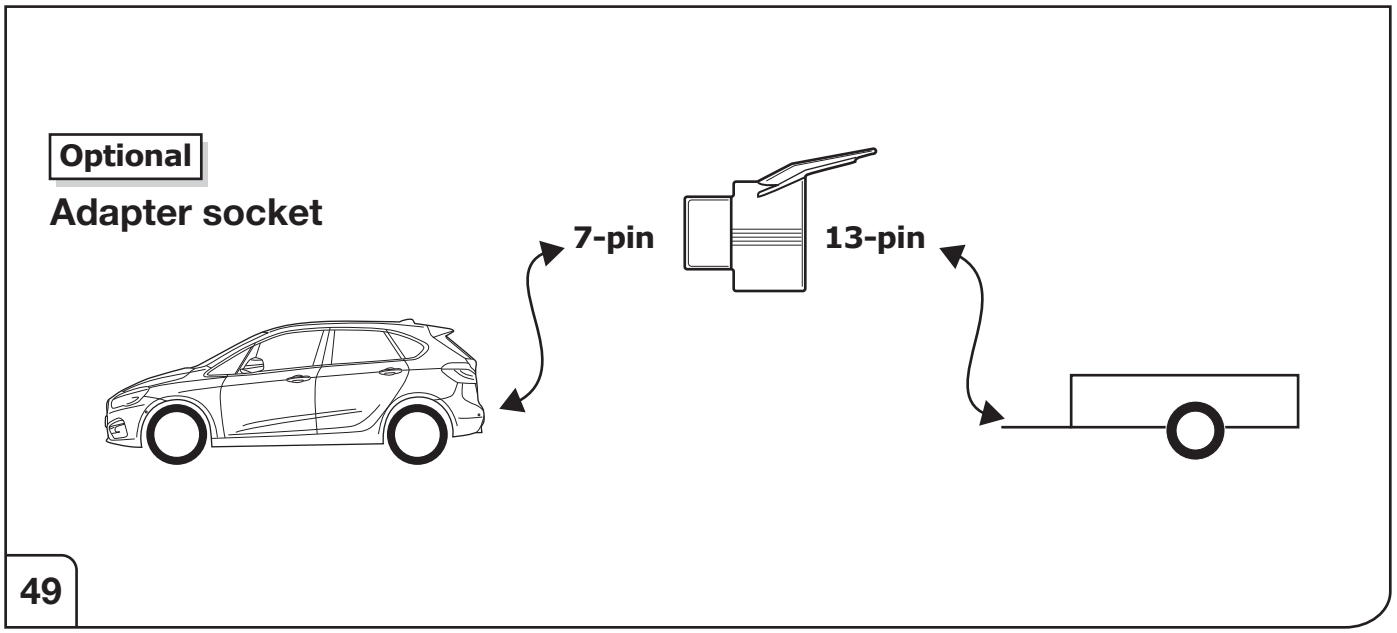




ECS Electronics UK
The Old Dyehouse
Macclesfield
Cheshire, SK11 7RN UK

SALE: +44 (0) 7980 847124
TECHNICAL: +44 (0) 7440 202052
WEB: www.ecs-electronicsuk.co.uk

Email-sales: n.lea@ecs-electronics.com
Email-technical: t.skinner@ecs-electronics.com

Revision: 2 / 17.01.2019
BW-027-07MU

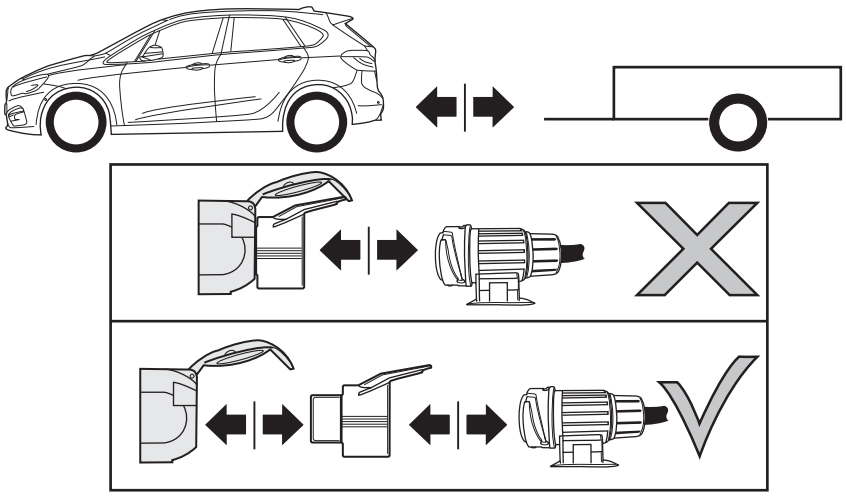

50

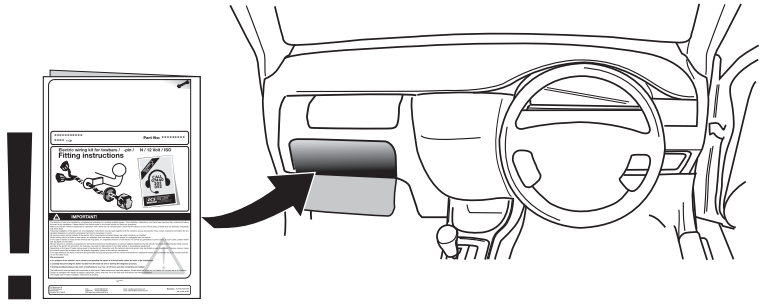


51



ECS Electronics UK
The Old Dyehouse
Macclesfield
Cheshire, SK11 7RN UK

SALE: +44 (0) 7980 847124
TECHNICAL: +44 (0) 7440 202052
WEB: www.ecs-electronicsuk.co.uk

Email-sales: n.lea@ecs-electronics.com
Email-technical: t.skinner@ecs-electronics.com

Revision: 2 / 17.01.2019
BW-027-07MU