! INFO !

Do not charge the battery of the towing vehicle and/or towed vehicle directly via the socket.

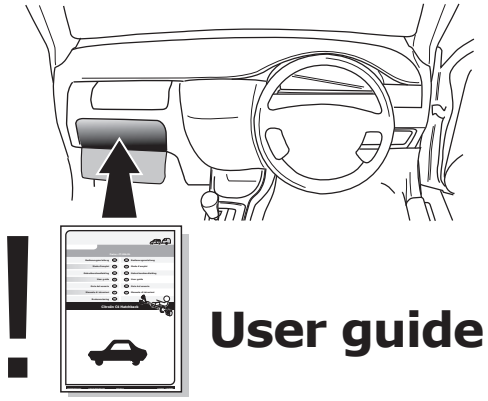

User guide

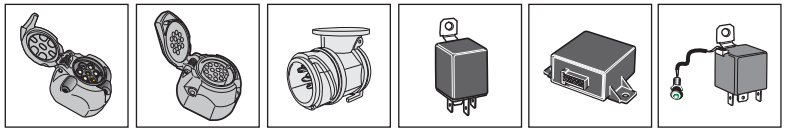

SPARE PARTS

www.ecs-electronicsuk.co.uk

ECS ELECTRONICS

Partnr.: HY-059-DHU

User Guide

Hyundai Santa Fe 2006 - 09/2009
Hyundai Santa Fe 2010-

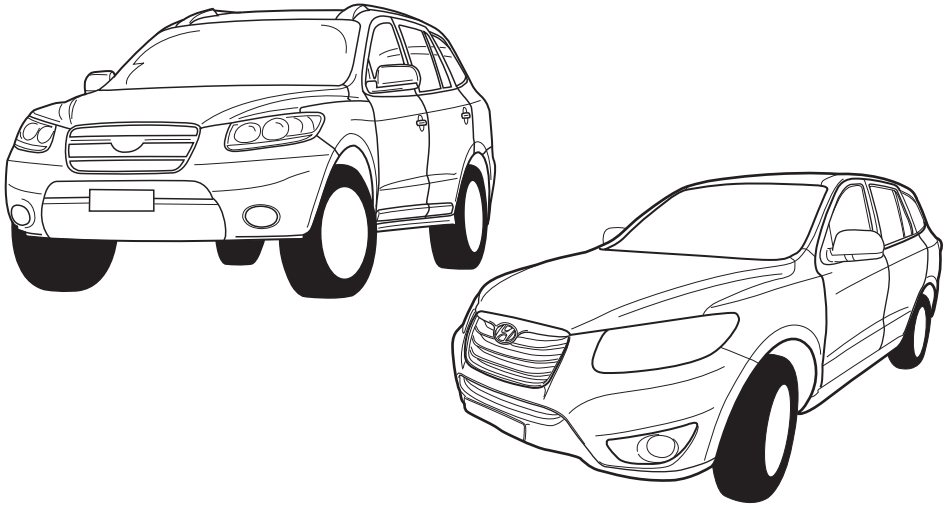

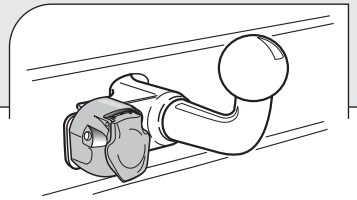

INFO

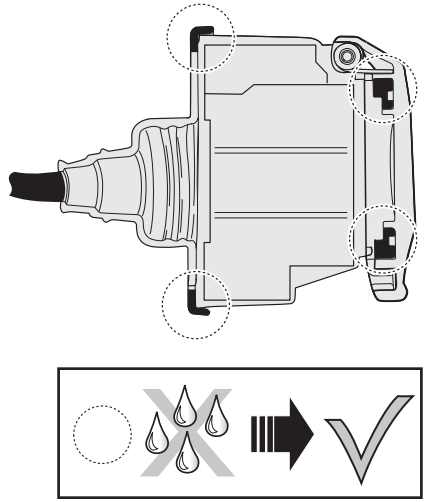

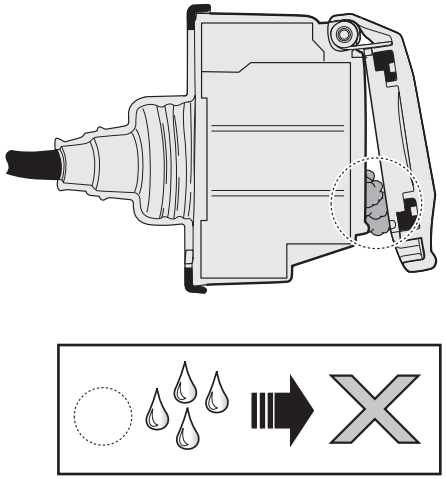

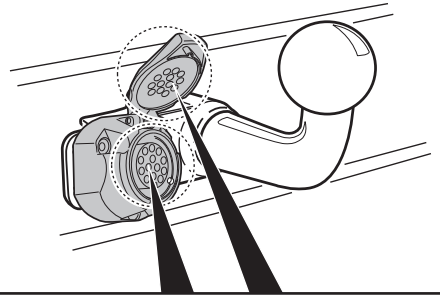

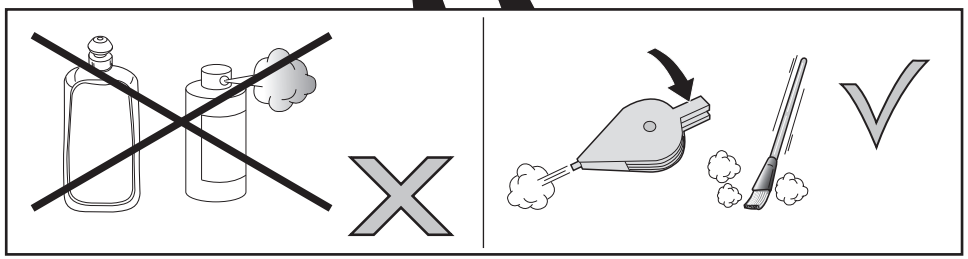

CHANGING THE FUSE

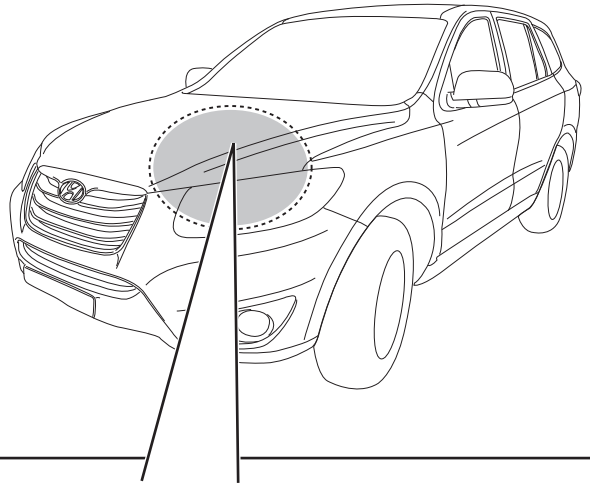

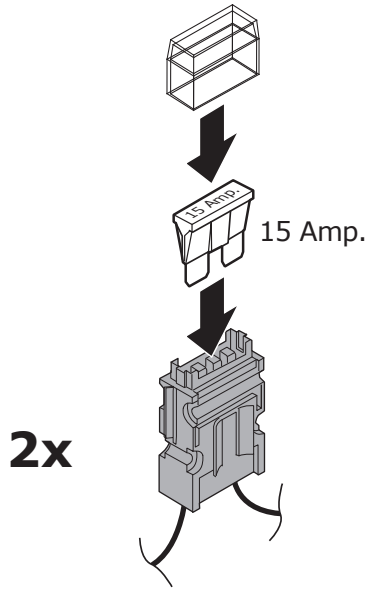

INFO

SOCKET CONNECTION

DIN/ISO 11446			1-8			STOP		Reverse	30+	15+	10	—	9
	1/L	2	3/31	4/R	5/58-R	6/54	7/58-L	8	9	10	11	12	13
Pmax	21W	2x21W		21W	52W	3x21W	52W	2x21W	180W/15Amp	180W/15Amp			
Colour	Yellow	Blue	White	Green	Brown	Red 1,00 mm²	Black	Black/ Red	Brown/ White	Red 2,50 mm²	White	-	White

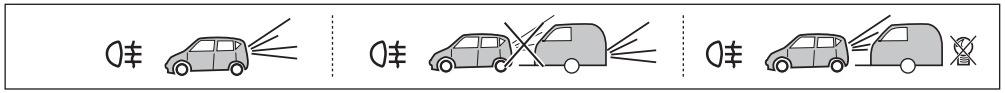

In a coupled trailer with working fog lamp, the fog lamp of the vehicle will be switched off, if applicable.

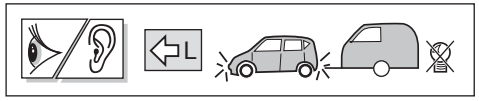

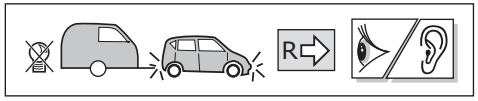

The flashing lights on the trailer are monitored. If one of the indicators of the trailer breaks down, a buzzer will be audible and/or a visual signal will be visible on the dashboard. Check the flashing lights on the trailer.

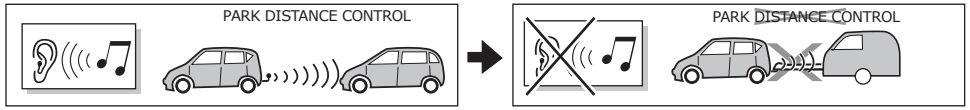

The wiring kit has a possibility to switch off any ParK Distance Control in the case of a coupled trailer.

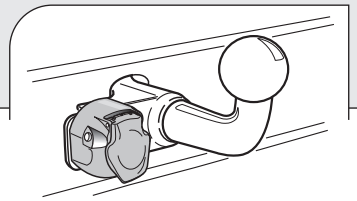

INFO : Ring.

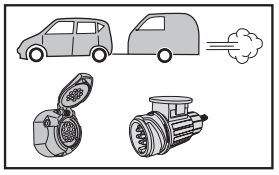

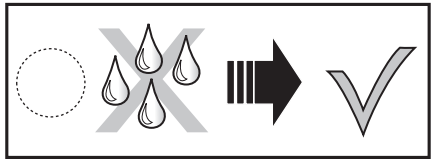

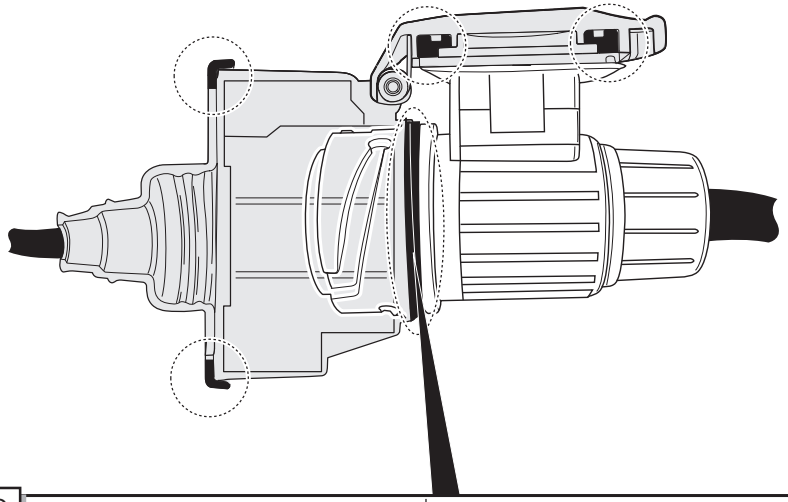

INFO

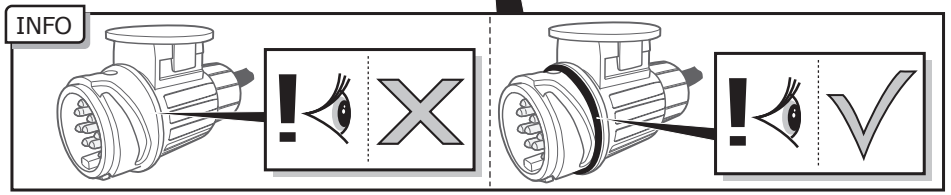

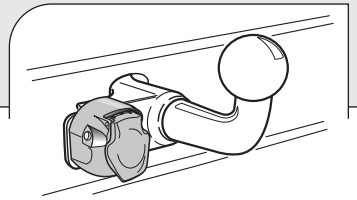

INFO : Adapt.

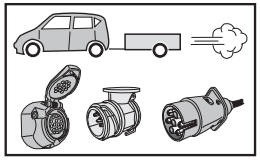

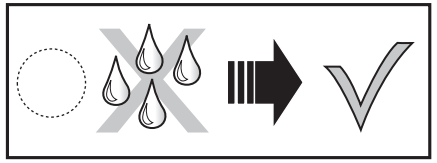

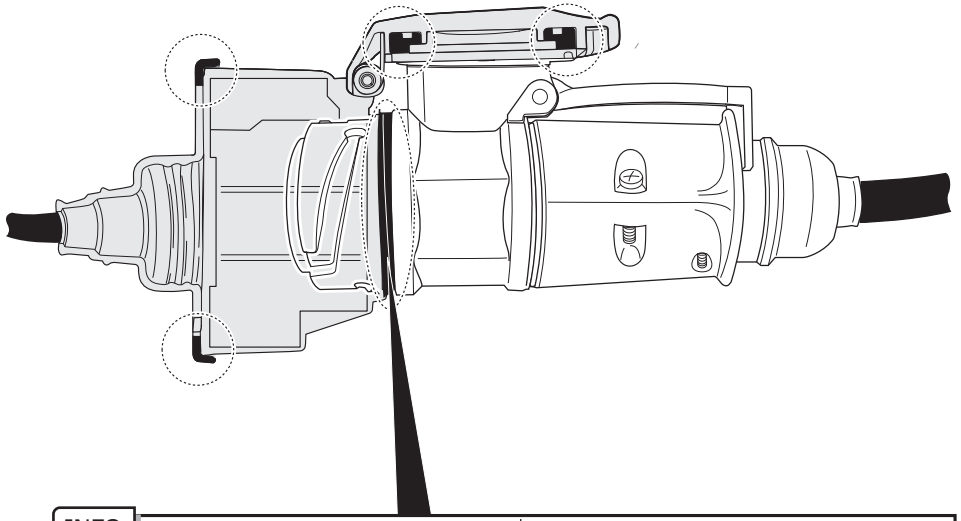

INFO

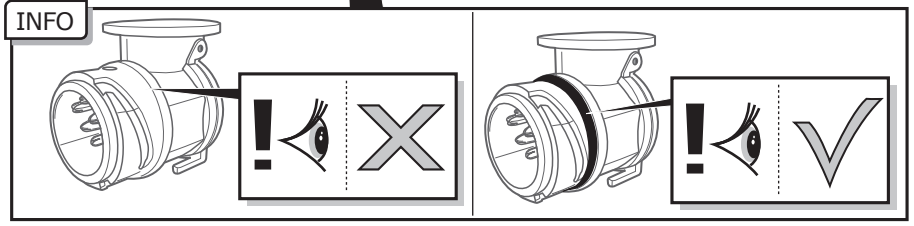

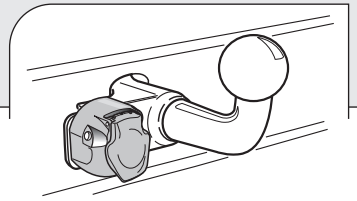
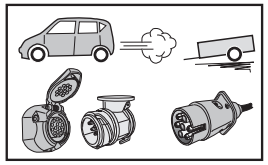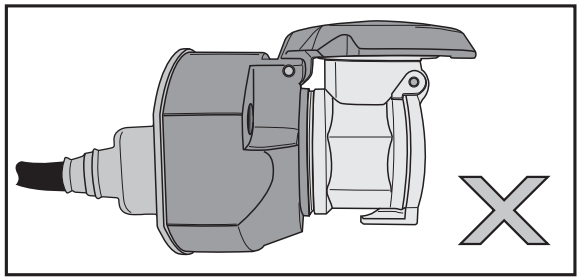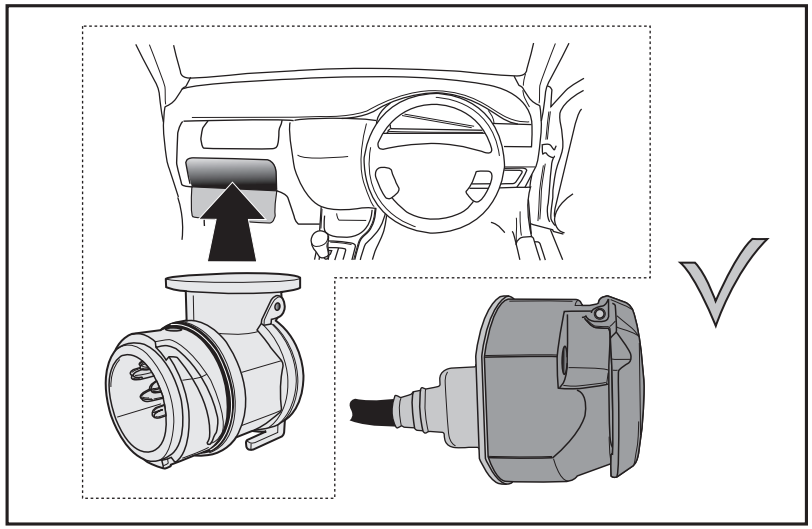
INFO : Storage